THICK TURRET TOOLING

KETEC®

Ketec Precision Tooling Co., Ltd
Manufacturing CNC Punch Tooling

Ketec Precision Tooling Co., Ltd
Manufacturing Press Brake Tooling

KETEC CHINA
SERVE THE WORLD

The biggest sheet metal tooling manufacturer in China

- National High Tech Enterprise
- Registered Capital: 50 Million RMB.
- Fix Assets: 150 Million RMB.
- Total factory area: 506,000 square feet (47,000 square meters).
- Annual Product Capacity: 1,200,000 sets for CNC punch press tooling; 20,000 sets for Press Brake Tooling.
- Over 300 high–quality employees in the company, KETEC have completed machining, EDM, heat treatment.
- National high–tech enterprise, features sheet metal technology R&D center.
- Obtains 18 national invention and new utility patent.
- Over 10,000 sheet metal enterprises in the world are using KETEC TOOLS
- 24 Direct sales in China and 18 KETEC Agents in the global countries.

1998 Sept. Founded Jiangnan Mold Tools Factory in Guangzhou.
Manufacturing stamping tooling.

2001 Aug. Established Ketec Precision Tooling Co.,Ltd.
Manufacturing CNC punch tooling and stamping tooling.

2004 Feb. Registered KETEC® trademark.

2004 Aug. ISO9000:2000 certified.

2004 Nov. Registered KETEC® as an international trademark.

2007 Dec. Registered enterprise value increasing to 5 Million RMB.

2008 Jan. Move to Mingzhu Industrial Park in Conghua Guangzhou with approximately 323,000 square feet (30,000 square meters).

2008 Jan. Registered enterprise value increasing to 10 Million RMB.

2008 Mar. Awarded Guangdong Major Products certificate for CNC punch tooling.

2008 Jun. Created guideline with permission from Standardization Administration of People's Republic of China for CNC Turret Punch Tooling standard.

2010 Feb. Published JB/T 10928–2010, CNC Turret Punch Tooling standard by China Ministry of Industry and Information.
Implemented in July 2010.

2010 Nov. ISO 9001:2008 Certified.

2011 Jun. Started selling TOP series thick turret tooling.

2011 Nov. Setup warehouse in Taicang Jiangsu.

2012 Mar. Registered enterprise value increasing to 50 Million RMB.

2012 Jul. Rated as National High Tech Enterprise.
Certification No: GR201244000059

2012 Aug. Second location completed in Industrial Nan Road Conghua Guangzhou with approximately 183000 square feet (17000 square meters). Manufacturing press brake tooling.

2012 Aug. Established KETEC Precision Tooling Inc. in USA.

2013 Oct. Setup warehouse in Tianjin.

2015 Oct. Honored the Integrity of Law–Abiding business model in Guangzhou.

CONTENTS

M85
M85 ABS
P1-P3

TOP85
TOP85 ABS
P4-P9

E85
P10-P15

TOP90
TOP90 ABS
P16-P20

KU TOOLING (ULTRA)
P21-P22

E80
P23-P24

SPECIAL TOOLING
P25-P35

FORMING TOOLING
P36-P52

SHEET METAL ACCESSORIES
P53-P60

OVERVIEW
P61-P64

SHAPE CLASSES
P65-P66

M85 M85ABS

- M85 / M85 ABS is quick adjust tooling, including A / B stations.
- Punch assy of A/B station is KETEC patent technology, punch grind life is 5mm [0.20"].
- M 85 equip with standard 85 punch, close guide; M85 ABS equip with 85 ABS punch, closed guide.
- Max. thickness: Mild steel A station 3.8 mm [0.15"], B stations: 6.3mm [0.25"].
- Punch assy of A/B station is KETEC patent technology, punch grind life is 5mm [0.20"], quick adjusting.
- Complete set tooling includes punch assy and die.
- Punch assy is installed in upper turret of the CNC punch machine.

M85
M85ABS
A STATION
(1.6–12.7mm)
[1/2"]

Solid Guide

Description	M85	M85 ABS
Punch Ass'y		
Round (0°)	HY.AA1RO.	HN.AA1RO.
Square(0°, 135°)	HY.AA3SQ.	HN.AA3SQ.
STD Shape (0°, 90°)	HY.AA2**.	HN.AA2**.
Other (0°, 90°)	HY.AA2**.	HN.AA2**.
Punch		
Round(no pin)	HT.AP1RO.	HK.AP1RO.
STD shape(pin)	HT.AP2**.	HK.AP2**.
Other(pin)	HT.AP2**.	HK.AP2**.
Die		
Round(no pin)	HT.AD1RO.	HT.AD1RO.
STD shape(pin)	HT.AD2**.	HT.AD2**.
Other(pin)	HT.AD2**.	HT.AD2**.
Guide		
Round (0°)	HT.AG1RO.	HN.AG1RO.
Shape (0°,90°)	HT.AG2**.	HN.AG2**.
Square (0°,135°)	HT.AG3SQ.	HN.AG3SQ.
Punch head ass'y	HY.AH9	HY.AH9

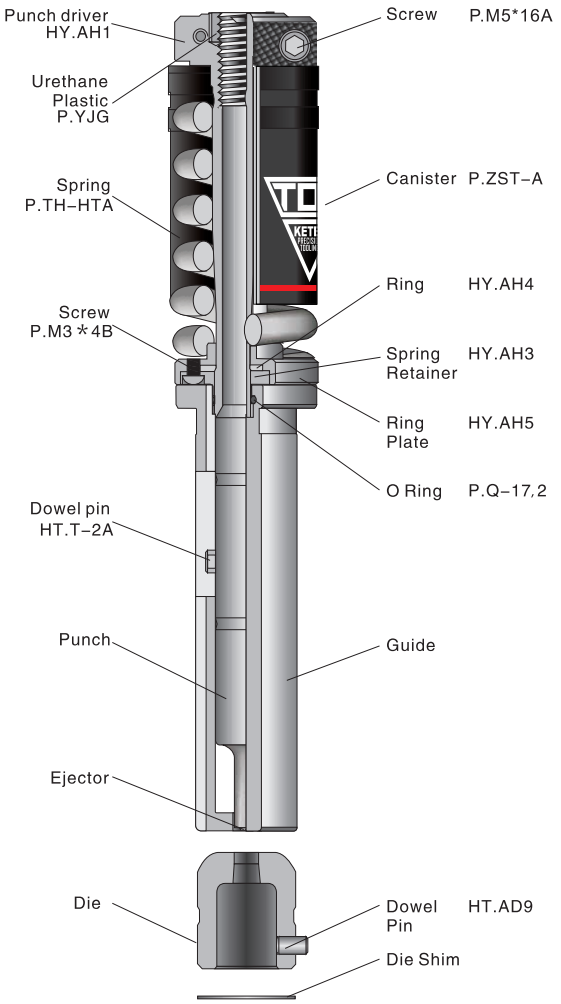

M85
M85ABS
B STATION
(12.71–31.7mm)
[1–1/4"]

Solid Guide

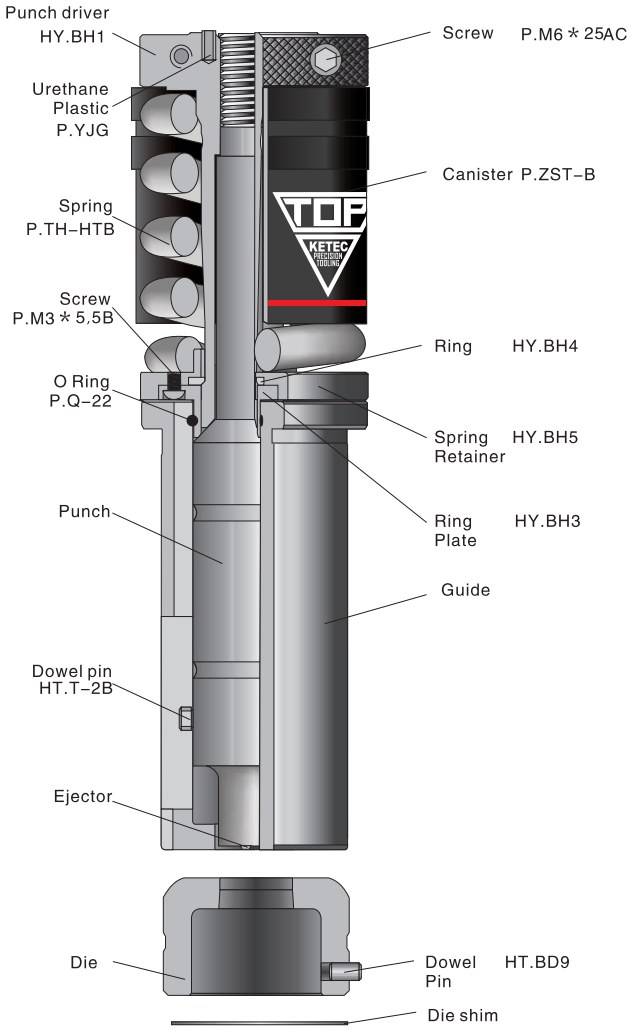

Discription	M85	M85 ABS
Punch Ass'y		
Round (0°)	HY.BA1RO.	HN.BA1RO.
Square(0°, 135°)	HY.BA3SQ.	HN.BA3SQ.
STD Shape (0°, 90°)	HY.BA2**.	HN.BA2**.
Other (0°, 90°)	HY.BA2**.	HN.BA2**.
Punch		
Round(no pin)	HT.BP1RO.	HK.BP1RO.
STD shape(pin)	HT.BP2**.	HK.BP2**.
Other(pin)	HT.BP2**.	HK.BP2**.
Die		
Round(no pin)	HT.BD1RO.	HT.BD1RO.
STD shape(pin)	HT.BD2**.	HT.BD2**.
Other(pin)	HT.BD2**.	HT.BD2**.
Guide		
Round (0°)	HT.BG1RO.	HN.BG1RO.
Shape (0°, 90°)	HT.BG2**.	HN.BG2**.
Square (0°, 135°)	HT.BG3SQ.	HN.BG3SQ.
Punch head ass'y	HY.BH9	HY.BH9

TOP85 TOP85ABS

- TOP85 series are Q–Adjust tooling, including A / B / C / D / E stations.
- Guide assy of C/D/E station is KETEC patent technology, with standard 85 punch / ABS punch & stripper.
- Standard key slots on the guides of C/D/E station are divided into 0° , 90° , 135° , good performance.
- Punch grind life of C/D/E station is 5–8mm [0.20"~0.31"],quick adjusting, without shim.
- Punch assy of A/B station is KETEC patent technology, punch grind life is 5mm [0.20"], quick adjusting.
- Top 85 equip with standard 85 punch, open guide, 90 stripper.
- Top 85 ABS equip with 85 ABS punch, open guide, 90 ABS stripper.
- Max. thickness: Mild steel A station 3.8 mm [0.15"], other stations: 6.3mm [0.25"]
- Complete set tooling includes punch assy and die.
- Punch assy is installed in upper turret of the CNC punch machine.

TOP85
TOP85ABS
A STATION
(1.6–12.7mm)
[1/2"]

Open Guide

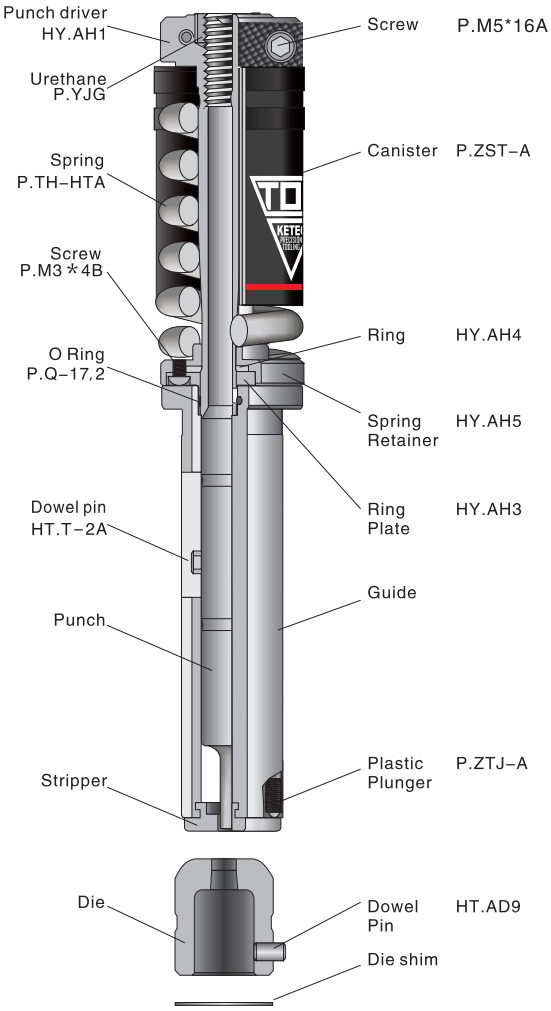

Discription	TOP85	TOP85 ABS
Punch ass'y		
Round (0°)	HV.AA1RO.	HK.AA1RO.
Square (0°, 135°)	HV.AA3SQ.	HK.AA3SQ.
STD shape (0°, 90°)	HV.AA2**.	HK.AA2**.
Other (0°, 90°)	HV.AA2**.	HK.AA2**.
Punch		
Round(no pin)	HT.AP1RO.	HK.AP1RO.
STD shape(pin)	HT.AP2**.	HK.AP2**.
Other(pin)	HT.AP2**.	HK.AP2**.
Stripper		
Round	H9.AS1RO.	HP.AS1RO.
STD shape	H9.AS1**.	HP.AS1**.
Other	H9.AS1**.	HP.AS1**.
Die		
Round(no pin)	HT.AD1RO.	HT.AD1RO.
STD shape(pin)	HT.AD2**.	HT.AD2**.
Other(pin)	HT.AD2**.	HT.AD2**.
Guide		
Round(0°)	HV.AG1	HK.AG1
Shape(0°, 90°)	HV.AG2	HK.AG2
Square (0°, 135°)	HV.AG3	HK.AG3
Punch head ass'y	HY.AH9	HY.AH9

TOP85
TOP85ABS

B STATION
(12.71–31.7mm)
[1–1/4"]

Open Guide

Discription	TOP85	TOP85 ABS
Punch ass'y		
Round (0°)	HV.BA1RO.	HK.BA1RO.
Square (0°, 135°)	HV.BA3SQ.	HK.BA3SQ.
STD shape(0°, 90°)	HV.BA2**.	HK.BA2**.
Other (0 , 90°)	HV.BA2**.	HK.BA2**.
Punch		
Round(no pin)	HT.BP1RO.	HK.BP1RO.
STD shape(pin)	HT.BP2**.	HK.BP2**.
Other(pin)	HT.BP2**.	HK.BP2**.
Stripper		
Round	H9.BS1RO.	HP.BS1RO.
STD shape	H9.BS1**.	HP.BS1**.
Other	H9.BS1**.	HP.BS1**.
Die		
Round(no pin)	HT.BD1RO.	HT.BD1RO.
STD shape(pin)	HT.BD2**.	HT.BD2**.
Other (pin)	HT.BD2**.	HT.BD2**.
Guide		
Round (0°)	HV.BG1	HK.BG1
Shape (0°,90°)	HV.BG2	HK.BG2
Square(0°,135°)	HV.BG3	HK.BG3
Punch head ass'y	HY.BH9	HY.BH9

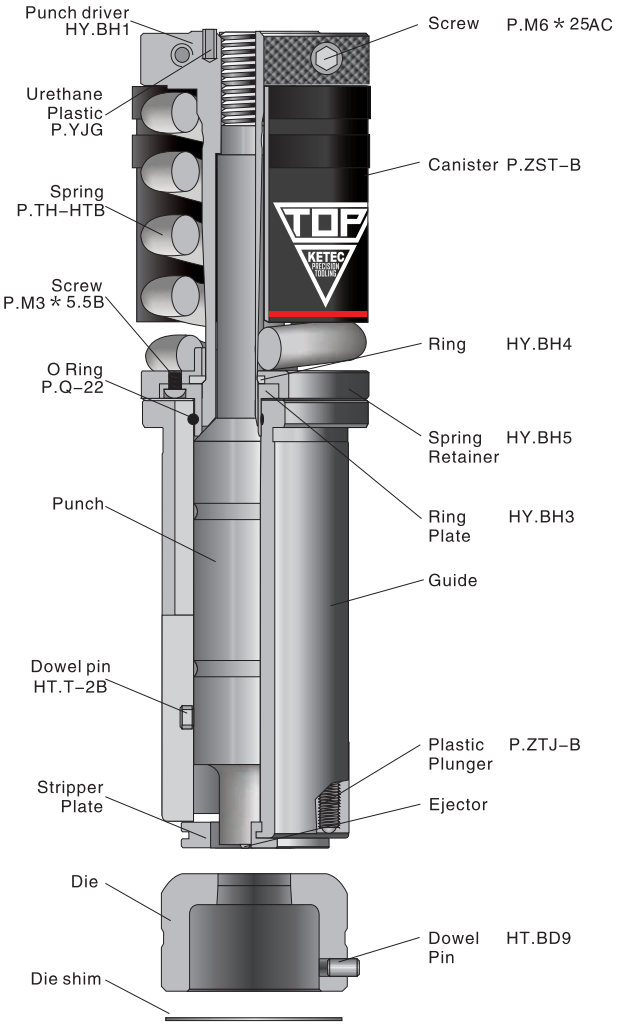

TOP85
TOP85ABS
C STATION
(31.71–50.8mm)
[2"]

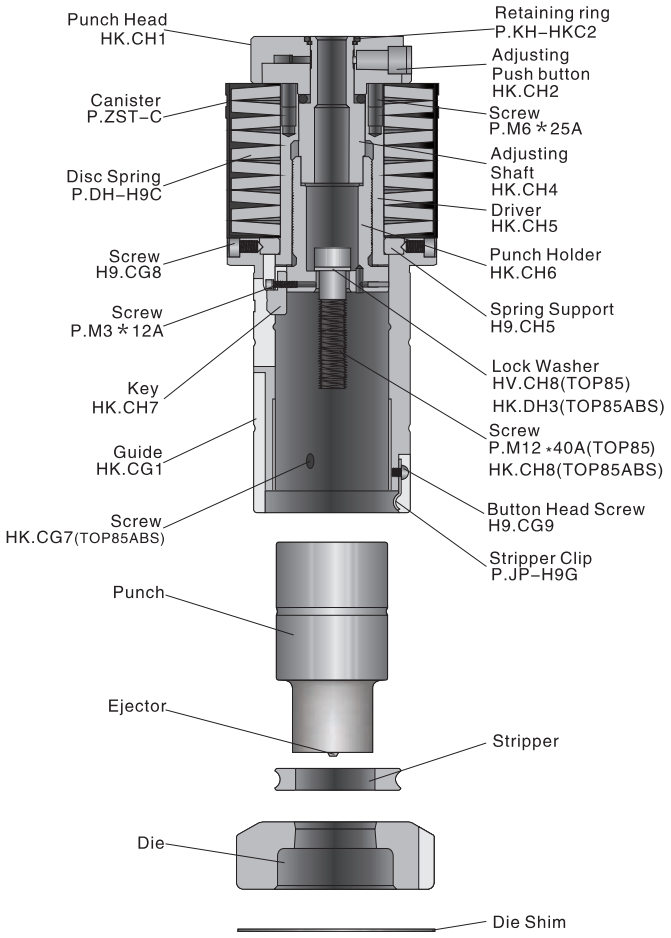

Description	TOP85	TOP85 ABS
Punch ass'y		
Round	HV.CA1RO.	HK.CA1RO.
STD shape	HV.CA1⁎⁎.	HK.CA1⁎⁎.
Other	HV.CA1⁎⁎.	HK.CA1⁎⁎.
Guide ass'y	HV.CC1.	HK.CC1.
Punch		
Round	HT.CP1RO.	HK.CP1RO.
STD shape	HT.CP2⁎⁎.	HK.CP2⁎⁎.
Other	HT.CP2⁎⁎.	HK.CP2⁎⁎.
Stripper		
Round	HT.CS1RO.	HK.CS1RO.
STD shape	HT.CS1⁎⁎.	HK.CS1⁎⁎.
Other	HT.CS1⁎⁎.	HK.CS1⁎⁎.
Die		
Round (0°)	HT.CD1RO.	HT.CD1RO.
STD shape (0°, 90°)	HT.CD2⁎⁎.	HT.CD2⁎⁎.
Other (0°, 90°)	HT.CD2⁎⁎.	HT.CD2⁎⁎.
Square (Opt. 0°, 135°)	HT.CD3SQ.	HT.CD3SQ.

TOP85
TOP85ABS
D STATION
(50.81–88.9mm)
[3–1/2"]

Description	TOP85	TOP85 ABS
Punch ass'y		
Round	HV.DA1RO.	HK.DA1RO.
STD shape	HV.DA1**.	HK.DA1**.
Other	HV.DA1**.	HK.DA1**.
Guide ass'y	HV.DC1.	HK.DC1.
Punch		
Round	HT.DP1RO.	HK.DP1RO.
STD shape	HT.DP2**.	HK.DP2**.
Other	HT.DP2**.	HK.DP2**.
Stripper		
Round	HT.DS1RO.	HK.DS1RO.
STD shape	HT.DS1**.	HK.DS1**.
Other	HT.DS1**.	HK.DS1**.
Die		
Round (0°)	HT.DD1RO.	HT.DD1RO.
STD shape (0°,90°)	HT.DD2**.	HT.DD2**.
Other (0°,90°)	HT.DD2**.	HT.DD2**.
Square (Opt. 0°,135°)	HT.DD3SQ.	HT.DD3SQ.

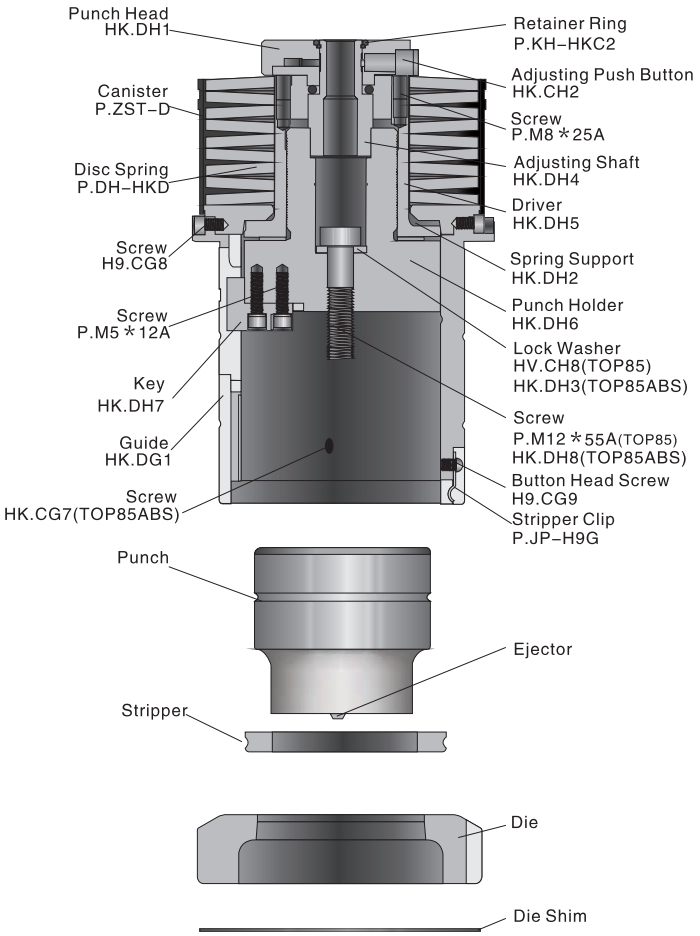

TOP85
TOP85ABS
E STATION
(88.91–114.3mm)
[4–1/2"]

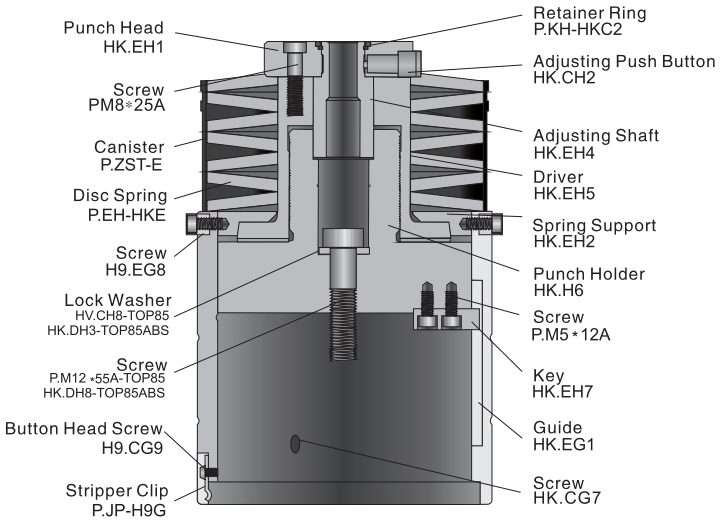

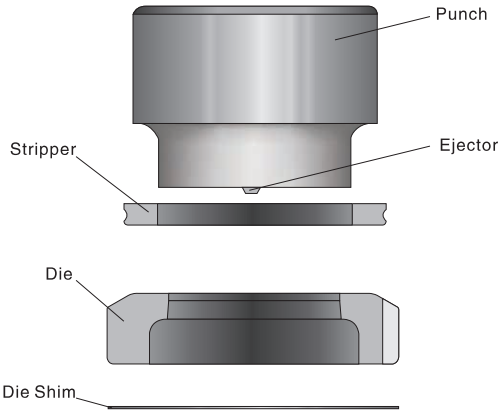

Description	TOP85	TOP85 ABS
Punch ass'y		
Round	HV.EA1RO.	HK.EA1RO.
STD shape	HV.EA1**.	HK.EA1**.
Other	HV.EA1**.	HK.EA1**.
Guide ass'y	HV.EC1.	HK.EC1.
Punch		
Round	HT.EP1RO.	HK.EP1RO.
STD shape	HT.EP2**.	HK.EP2**.
Other	HT.EP2**.	HK.EP2**.
Stripper		
Round	HT.ES1RO.	HK.ES1RO.
STD shape	HT.ES1**.	HK.ES1**.
Other	HT.ES1**.	HK.ES1**.
Die		
Round (0°)	HT.ED1RO.	HT.ED1RO.
STD shape (0°,90°)	HT.ED2**.	HT.ED2**.
Other (0°,90°)	HT.ED2**.	HT.ED2**.
Square (Opt. 0°,135°)	HT.ED3SQ.	HT.ED3SQ.

E85

- E85 series are standard tools, including station A/B/C/D/E, compatible with Amada tooling.
- Standard key slots on the guides of A/B station are 0° ,90° , square are 0° ,135° .
- The tapers on spring retainers of A/B station are different, the grind life will be extended with exchange using.
- Max. thickness: Mild Steel for A station is 3.8mm [0.15"], other station is 6.3mm [0.25"].
- Complete set tooling includes punch assy and die.
- Punch assy is installed in upper turret of the CNC punch machine.

E85

A STATION
(1.6~12.7mm)
[1/2"]

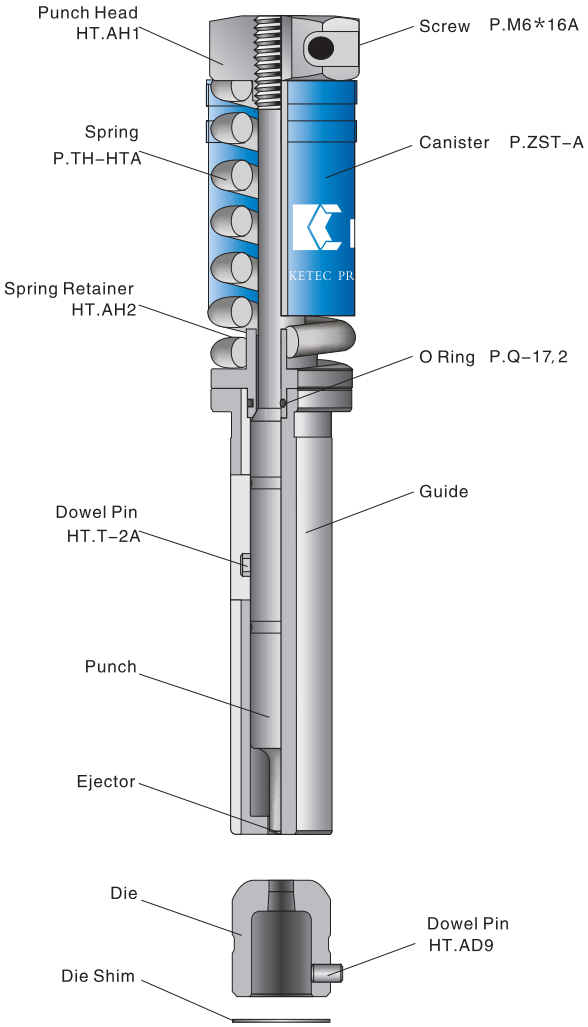

Description	Code
Punch ass'y	
Round (0°)	HT.AA1RO.
Square (0°, 135°)	HT.AA3SQ.
STD shape (0°, 90°)	HT.AA2**.
Other (0°, 90°)	HT.AA2**.
Punch	
Round (no pin)	HT.AP1RO.
STD shape (pin)	HT.AP2**.
Other (pin)	HT.AP2**.
Die	
Round (no pin)	HT.AD1RO.
STD shape (pin)	HT.AD2**.
Other (pin)	HT.AD2**.
Guide	
Round (0°)	HT.AG1RO.
Shape (0°, 90°)	HT.AG2**.
Square (0°, 135°)	HT.AG3SQ.
Punch head ass'y	HT.AH9

E85

B STATION (12.71–31.7mm) [1–1/4"]

Description	Code
Punch ass'y	
Round (0°)	HT.BA1RO.
Square (0°, 135°)	HT.BA3SQ.
STD shape (0°, 90°)	HT.BA2**.
Other (0°, 90°)	HT.BA2**.
Punch	
Round (no pin)	HT.BP1RO.
STD shape (pin)	HT.BP2**.
Other (pin)	HT.BP2**.
Die	
Round (no pin)	HT.BD1RO.
STD shape (pin)	HT.BD2**.
Other (pin)	HT.BD2**.
Guide	
Round (0°)	HT.BG1RO.
Shape (0°, 90°)	HT.BG2**.
Square (0°, 135°)	HT.BG3SQ.
Punch head ass'y	HT.BH9

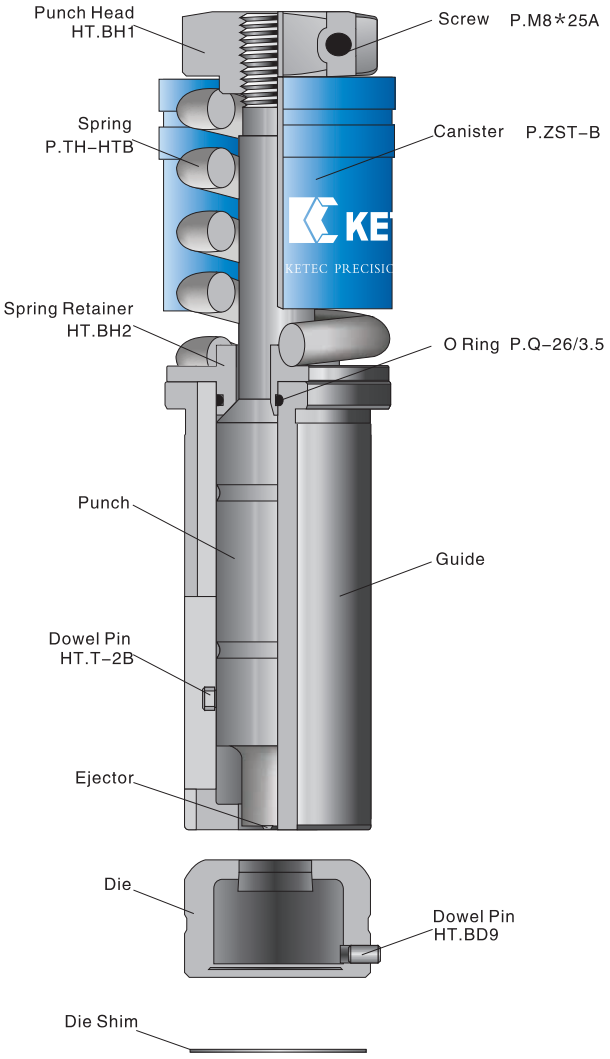

E85

C STATION (31.71–50.8mm) [2"]

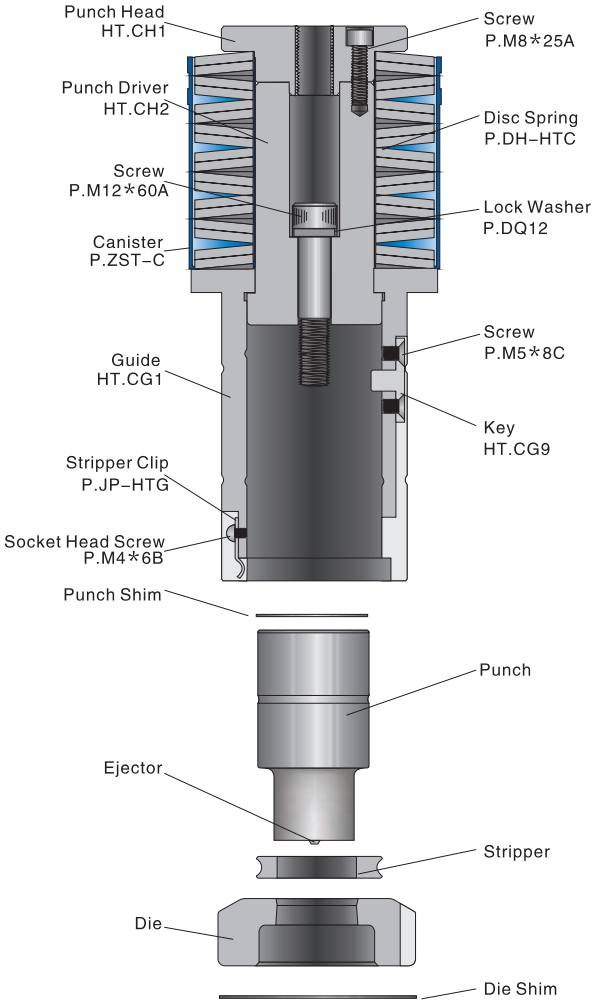

Description	Code
Punch ass'y	
Round	HT.CA1RO.
STD shape	HT.CA1**.
Other	HT.CA1**.
Guide ass'y (0°,90°)	HT.CC1.
Punch	
Round	HT.CP1RO.
STD shape	HT.CP2**.
Other	HT.CP2**.
Square (Opt.0°,135°)	HT.CP3SQ.
Stripper	
Round	HT.CS1RO.
STD shape	HT.CS1**.
Other	HT.CS1**.
Die	
Round(0°)	HT.CD1RO.
STD shape (0°,90°)	HT.CD2**.
Other (0°,90°)	HT.CD2**.
Square (Opt. 0°,135°)	HT.CD3SQ.

E85

D STATION (50.81–88.9mm) [3–1/2"]

Description	Code
Punch ass'y	
Round	HT.DA1RO.
STD Shape	HT.DA1**.
Other	HT.DA1**.
Guide ass'y	HT.DC1.
Punch	
Round (0°)	HT.DP1RO.
STD shape (0°)	HT.DP2**.
Other (0°)	HT.DP2**.
Square (Opt. 0°,45°)	HT.DP3SQ.
Stripper	
Round	HT.DS1RO.
STD shape	HT.DS1**.
Other	HT.DS1**.
Die	
Round (0°)	HT.DD1RO.
STD shape (0°,90°)	HT.DD2**.
Other (0°,90°)	HT.DD2**.
Square (Opt.0°, 135°)	HT.DD3SQ.

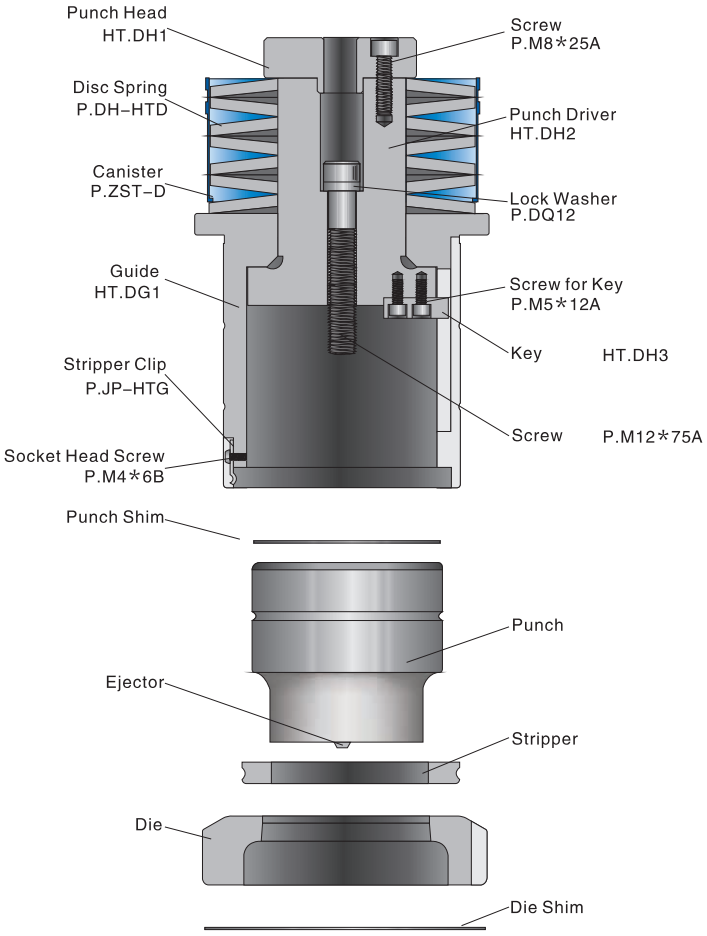

E85

E STATION
(88.91–114.3mm)
[4–1/2"]

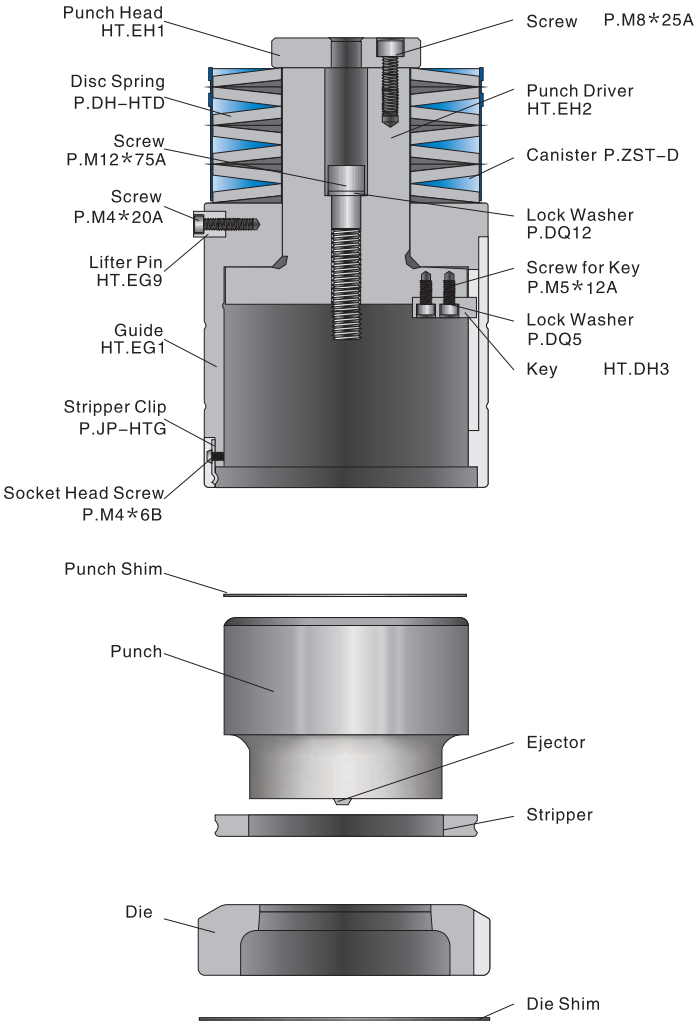

Discription	Code
Punch ass'y	
Round	HT.EA1RO.
STD shape	HT.EA1**.
Other	HT.EA1**.
Guide ass'y(0°,90°)	HT.EC1.
Punch	
Round (0°)	HT.EP1RO.
STD shape (0°)	HT.EP2**.
Other (0°)	HT.EP2**.
Stripper	
Round	HT.ES1RO.
STD shape	HT.ES1**.
Other	HT.ES1**.
Die	
Round (0°)	HT.ED1RO.
STD shape (0°,90°)	HT.ED2**.
Other (0°,90°)	HT.ED2**.

TOP90 TOP90ABS

- TOP90 series tooling, including station A/B/C/D.
- Guide assy of C/D station is KETEC patent technology, with standard 90 punch, 90 stripper.
- Punch head assy of A/B station is KETEC patent technology, with standard 90 punch / ABS punch / stripper.
- The punch grind life of A/B station is 6.3mm [0.25"] quick adjusting, w/o shim.
- The punch grind life of C/D station is 5–8mm [0.20"~0.31"], quick adjusting, w/o shim.
- Standard key slots on the guides of C/D station with 0°,90°,135°, good performance.
- Max thickness: Mild Steel for A station is 3.8mm [0.15"], for others stations is 6.3mm [0.25"]
- Complete set tooling includes punch assy and die.
- Punch assy is installed in upper turret of the CNC punch machine.

TOP90
TOP90ABS
A STATION
(1.6–12.7mm)
[1/2"]

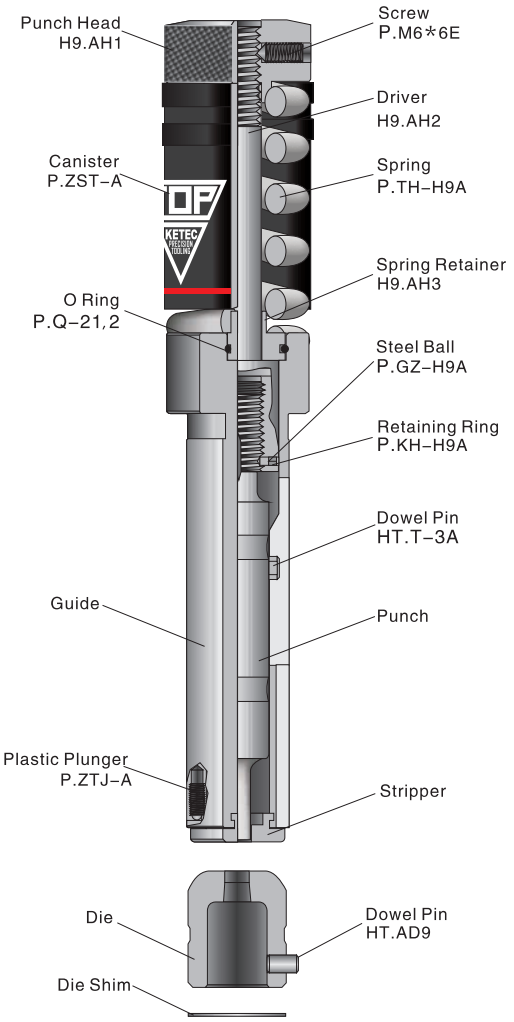

Description	TOP90	TOP90 ABS
Punch ass'y		
Round (0°)	H9.AA1RO.	HP.AA1RO.
Square (0°, 135°)	H9.AA3SQ.	HP.AA3SQ.
STD shape (0°, 90°)	H9.AA2**.	HP.AA2**.
Other (0°, 90°)	H9.AA2**.	HP.AA2**.
Punch		
Round (no pin)	H9.AP1RO.	HP.AP1RO.
STD shape (pin)	H9.AP2**.	HP.AP2**.
Other (pin)	H9.AP2**.	HP.AP2**.
Stripper		
Round	H9.AS1RO.	HP.AS1RO.
STD shape	H9.AS1**.	HP.AS1**.
Other	H9.AS1**.	HP.AS1**.
Die		
Round(no pin)	HT.AD1RO.	HT.AD1RO.
STD shape (pin)	HT.AD2**.	HT.AD2**.
Other (pin)	HT.AD2**.	HT.AD2**.
Guide		
Round (0°)	H9.AG1	HP.AG1
Shape (0°, 90°)	H9.AG2	HP.AG2
Square (0°, 135°)	H9.AG3	HP.AG3
Punch head ass'y	H9.AH9	H9.AH9

TOP90
TOP90ABS
B STATION
(12.71–31.7mm)
[1–1/4"]

Description	TOP90	TOP90 ABS
Punch ass'y		
Round (0°)	H9.BA1RO.	HP.BA1RO.
Square (0°, 135°)	H9.BA3SQ.	HP.BA3SQ.
STD shape (0°, 90°)	H9.BA2**.	HP.BA2**.
Other (0°, 90°)	H9.BA2**.	HP.BA2**.
Punch		
Round (no pin)	H9.BP1RO.	HP.BP1RO.
STD shape (pin)	H9.BP2**.	HP.BP2**.
Other (pin)	H9.BP2**.	HP.BP2**.
Stripper		
Round	H9.BS1RO.	HP.BS1RO.
STD shape	H9.BS1**.	HP.BS1**.
Other	H9.BS1**.	HP.BS1**.
Die		
Round (no pin)	HT.BD1RO.	HT.BD1RO.
STD shape (pin)	HT.BD2**.	HT.BD2**.
Other (pin)	HT.BD2**.	HT.BD2**.
Guide		
Round (0°)	H9.BG1	HP.BG1
Shape (0°,90°)	H9.BG2	HP.BG2
Square (0°,135°)	H9.BG3	HP.BG3
Punch head ass'y	H9.BH9	H9.BH9

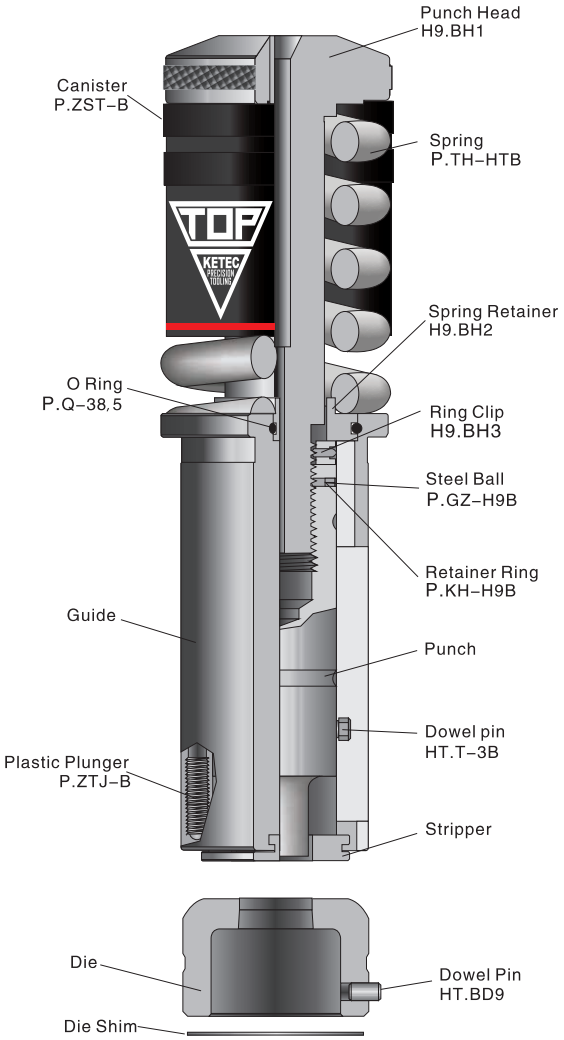

TOP90
TOP90ABS
C STATION
(31.71–50.8mm)
[2"]

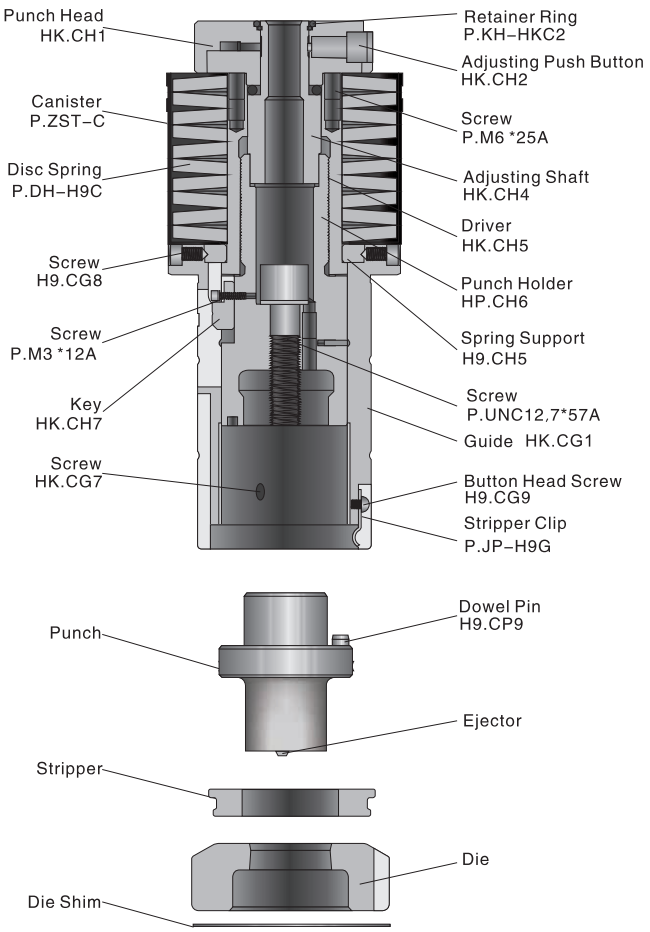

Description	TOP90	TOP90 ABS
Punch ass'y		
Round	HJ.CA1RO.	HP.CA1RO.
STD shape	HJ.CA1**.	HP.CA1**.
Other	HJ.CA1**.	HP.CA1**.
Guide ass'y (0°,90°,135°)	HP.CC1.	HP.CC1.
Punch		
Round	H9.CP1RO.	H9.CP1RO.
STD shape	H9.CP1**.	H9.CP1**.
Other	H9.CP1**.	H9.CP1**.
Stripper		
Round	H9.CS1RO.	HP.CS1RO.
STD shape	H9.CS1**.	HP.CS1**.
Other	H9.CS1**.	HP.CS1**.
Die		
Round (0°)	HT.CD1RO.	HT.CD1RO.
STD Shape (0°, 90°)	HT.CD2**.	HT.CD2**.
Other (0°, 90°)	HT.CD2**.	HT.CD2**.
Square (Opt. 0°, 135°)	HT.CD3SQ.	HT.CD3SQ.

TOP90
TOP90ABS
D STATION
(50.81–88.9mm)
[3–1/2"]

Description	TOP90	TOP90 ABS
Punch ass'y		
Round	HJ.DA1RO.	HP.DA1RO.
STD shape	HJ.DA1**.	HP.DA1**.
Other	HJ.DA1**.	HP.DA1**.
Guide ass'y	HP.DC1.	HP.DC1.
Punch		
Round	H9.DP1RO.	H9.DP1RO.
STD shape	H9.DP1**.	H9.DP1**.
Other	H9.DP1**.	H9.DP1**.
Stripper		
Round	H9.DS1RO.	HP.DS1RO.
STD shape	H9.DS1**.	HP.DS1**.
Other	H9.DS1**.	HP.DS1**.
Die		
Round (0°)	HT.DD1RO.	HT.DD1RO.
STD Shape (0°, 90°)	HT.DD2**.	HT.DD2**.
Other (0°, 90°)	HT.DD2**.	HT.DD2**.
Square (Opt. 0°, 135°)	HT.DD3SQ.	HT.DD3SQ.

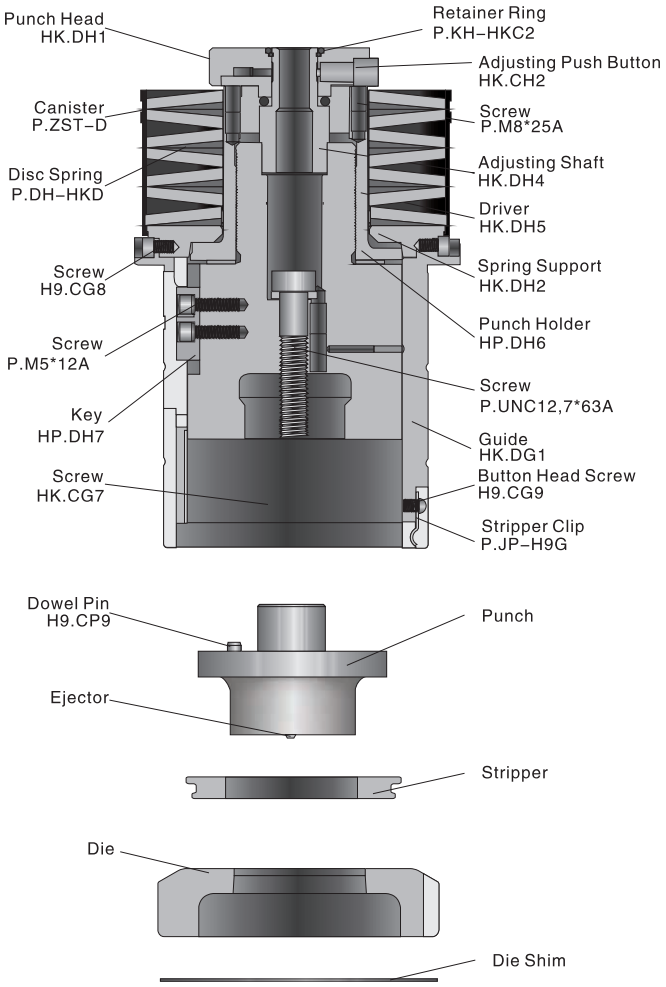

KU TOOLING

A STATION

(1.6–12.7mm) [1/2"]

Ultra Style

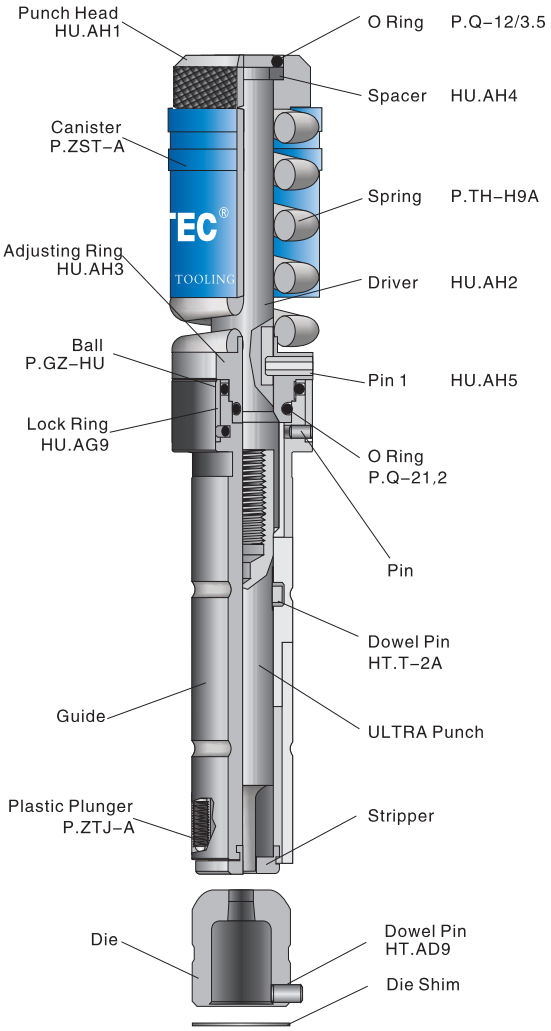

Description	Code
Punch ass'y	
Round (0°)	HU.AA1RO
Square (0°,135°)	HU.AA3SQ
STD shape (0°,90°)	HU.AA2**
Other (0°,90°)	HU.AA2**
Punch	
Round	HU.AP1RO
STD shape	HU.AP1**.
Other	HU.AP1**.
Stripper	
Round	HU.AS1RO
STD shape	HU.AS1**.
Other	HU.AS1**.
Die	
Round (no pin)	HT.AD1RO
STD shape (pin)	HT.AD2**.
Other (pin)	HT.AD2**.
Guide	
Round (0°)	HU.AG1
Shape (0°, 90°)	HU.AG2
Square (0°, 135°)	HU.AG3
Punch head ass'y	HU.AH9

KU TOOLING

B STATION (12.71–31.7mm) [1–1/4"]

Ultra Style

Description	Code
Punch ass'y	
Round (0°)	HU.BA1RO
Square (0°,135°)	HU.BA3SQ
STD shape (0°,90°)	HU.BA2**
Other (0°,90°)	HU.BA2**
Punch	
Round	HU.BP1RO
STD shape	HU.BP1**.
Other	HU.BP1**.
Stripper	
Round	HU.BS1RO
Shape	HU.BS1**.
Other	HU.BS1**.
Die	
Round (no pin)	HT.BD1RO
STD shape (pin)	HT.BD2**.
Other (pin)	HT.BD2**.
Guide	
Round (0°)	HU.BG1
Shape (0°, 90°)	HU.BG2
Square (0°, 135°)	HU.BG3
Punch head ass'y	HU.BH9

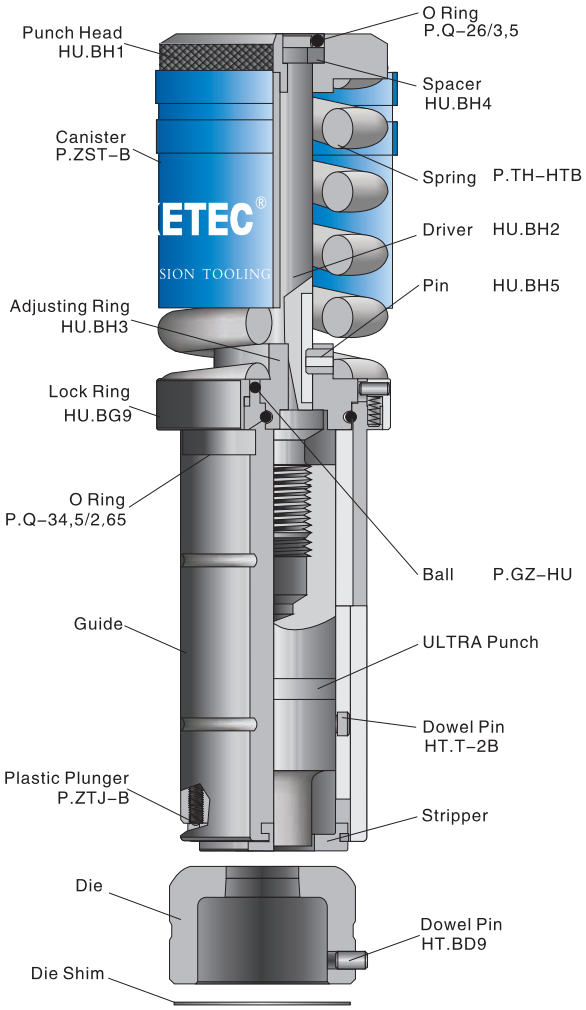

E80

A STATION (1.6–12.7mm) [1/2"]

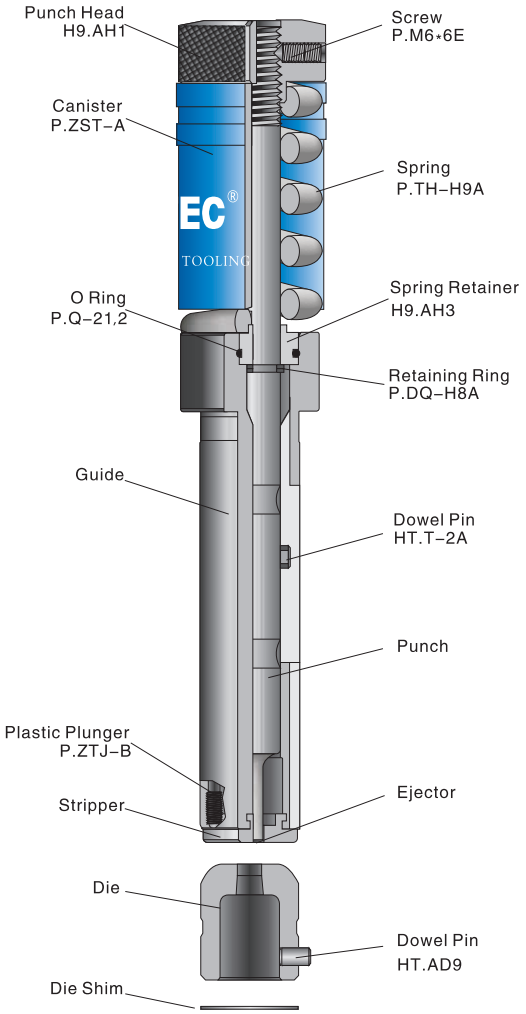

Description	Code
Punch ass'y	
Round (0°)	H8.AA1RO.
Square (0°,135°)	H8.AA3SQ.
STD shape (0°,90°)	H8.AA2**.
Other (0°,90°)	H8.AA2**.
Punch	
Round (no pin)	H8.AP1RO.
STD shape (pin)	H8.AP2**.
Other (pin)	H8.AP2**.
Stripper	
Round	H9.AS1RO.
STD shape	H9.AS1**.
Other	H9.AS1**.
Die	
Round (no pin)	HT.AD1RO.
STD shape (pin)	HT.AD2**.
Other (pin)	HT.AD2**.
Guide (Opt. solid)	
Round (0°)	H8.AG1RO.
Shape (0°, 90°)	H8.AG2**.
Square (0°, 135°)	H8.AG3SQ.
Guide (STD. open)	
Round (0°)	H9.AG1
Shape (0°, 90°)	H9.AG2
Square (0°, 135°)	H9.AG3

E80

B STATION
(12.71–31.7mm)
[1–1/4"]

Description	Code
Punch ass'y	
Round (0°)	H8.BA1RO.
Square (0°,135°)	H8.BA3SQ.
STD shape (0°,90°)	H8.BA2∗∗.
Other (0°,90°)	H8.BA2∗∗.
Punch	
Round (no pin)	H8.BP1RO.
STD shape (pin)	H8.BP2∗∗.
Other (pin)	H8.BP2∗∗.
Stripper	
Round	H8.BS1RO.
STD shape	H8.BS1∗∗.
Other	H8.BS1∗∗.
Die	
Round (no pin)	HT.BD1RO.
STD shape (pin)	HT.BD2∗∗.
Other (pin)	HT.BD2∗∗.
Guide	
Round (0°)	H8.BG1
Shape (0°, 90°)	H8.BG2
Square (0°, 135°)	H8.BG3

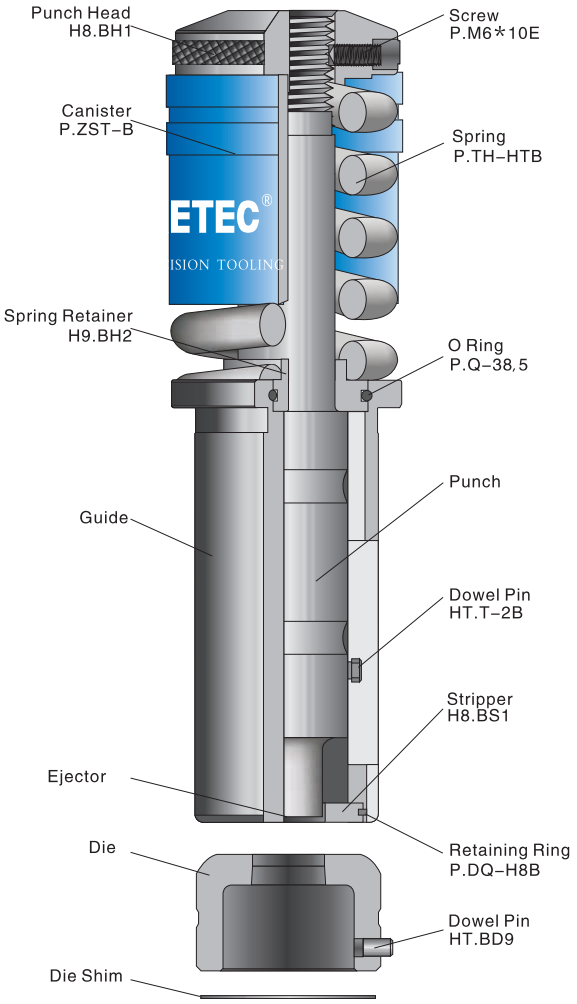

Contouring

SPH Heavy Duty

E-Break Tool
E-Bend Tool

SPS
Fully Guide Small Diameter

SPL

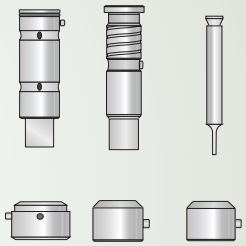

Multi-Tool

Cluster

Slitting Tool

Close To Clamp

SPECIAL TOOLING

CONTOURING
A STATION

Specification / Size:

Punch size:

Ø2mm[0.079"], Ø2.5mm[0.098"]

Die clearance:

+0.2mm [0.008"]

+0.25mm [0.010"]

Standard **SPS** **CONTOURING**

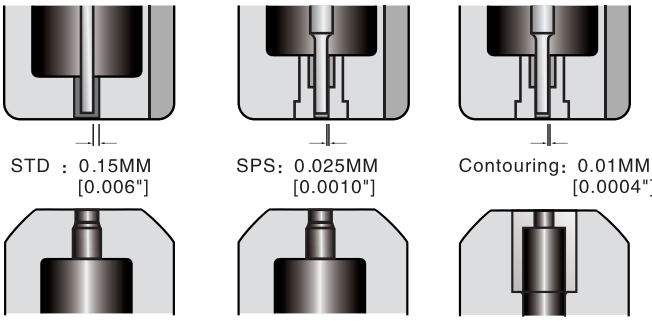

Contouring tool size:
RO 2 + 0.2 mm [0.08"+0.008"]
punch 1 mm [0.04"], SPCC precisely in 0.5mm [0.02"] step.

Die

- Special die structure, prevent slug pulling
- Die is a Press–Fit insert structure
- Hard alloy material, hardness: HRC75, longer tool life.

Punch

- ABS structure cools down the lubricating of slide and punch blade portion.
- Smaller size punch with changeable insert is more affordable.
- Hard alloy material, hardness: HRC75, longer tool life.
- Guide surface with hardening treatment increases wear resistance.
- Can achieve 0.5mm [0.02"] step in precisely nibbling
- Both punch and die are hard alloy material, hardness is HRC75.
- Get a fine contour with standard tools, elimination of secondary operations.
- Prevent punch breakage when disalignment
- With ABS function, reduce material adhesion to punch surface increased wear resistance, longer tool life.

Description	Code
A STN Contouring Die (Round)	HT. ADLRO
A STN Thick Turret Contouring Die (Round) ϕ2.5+0.2	HT. ADLRO. 2.5 /0.2
A STN Thick Turret Contouring Die (Round) ϕ2+0.2	HT. ADLRO. 2 /0.2
A STN Contouring Punch ass'y (Round)	HT. AALRO
A STN Thick Turret Contouring Punch ass'y (Round) ϕ2	HT. AALRO. 2
A STN Contouring Guide (Round)	HT. AGLRO
A STN Thick Turret Contouring Guide (Round) ϕ2	HT. AGLRO. 2
A STN Contouring Punch Insert (Round)	HT. APLRO
A STN Thick Turret Contouring Punch Insert (Round) ϕ2	HT. APLRO. 2
A STN Thick Turret Contouring Punch Insert (Round) ϕ2.5	HT. APLRO. 2.5

SPS Fully Guide Small Diameter

A STATION (1.0–6.0mm) [0.23"]

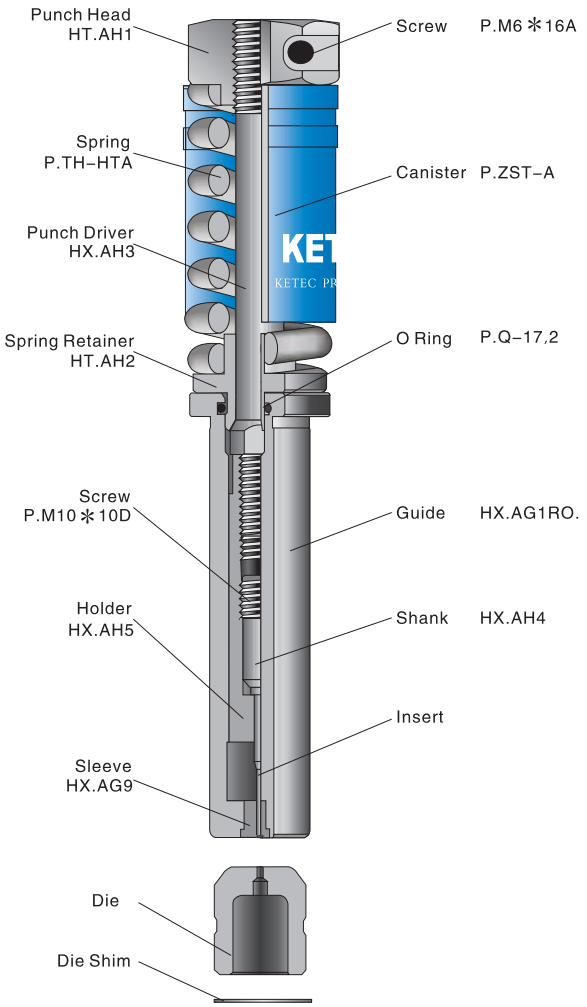

Description	Code
Punch ass'y	HX.AA1RO.
Insert	HX.AP1RO.
Guide	HX.AG1RO.
Die	HT.AD1RO.

- Recomended when punching small holes
- Replaceable insert, lower cost, only for round
- Small range:1.0– 6 mm [0.04"~0.24"]
- Size should be over below data:

Aluminum 0.75T
Mild steel 1T
Stainless steel 2T

SPRING PACKS LIGHT (SPL)

HL.AH9	HL.BH9	HL.CC1	HL.DC1	HL.EC1

Features:

- Eliminate or reduce unwanted sheet marking
- Compatible with STD TOP 85 series spring packs
- Adjust the numbers and sorts of springs to change the pressure of C/D/E station
- Reduce noise level, longer life for springs
- Purchase spring packs
- Suggest to use solid guide for A/B station

Calculate pressure of springs:

- Spring pressure of A/B station compare to TOP85 series, A STN 65%, B STN 60%
- Springs with different colors should be evenly distributed when adjust the springs of C/D/E station

Spring Pressure compares to TOP 85 series, data as below form:

C STATION		D / E STATION	
Spring Combination	Percentage	Spring Combination	Percentage
9 BLUE	13%	9 BLUE	13. 8%
3RED+6BLUE	17. 3%	3RED+6BLUE	18%
6RED+3BLUE	21. 6%	6RED+3BLUE	23%
9 RED	26%	9 RED	27. 5%
6RED+3GREEN	34. 6%	6RED+3GREEN	36. 6%
3RED+6GREEN	43. 2%	3RED+6GREEN	45. 7%
9 GREEN	52%	9 GREEN	55%

If no special requires from buyers, the package will be 9 red and 9 green springs, buyers can adjust by themselves.

CLOSE TO CLAMP

D STATION
RE (50.81–88.9mm)
[3–1/2"]

E STATION
RE(88.91–114.3mm)
[4–1/2"]

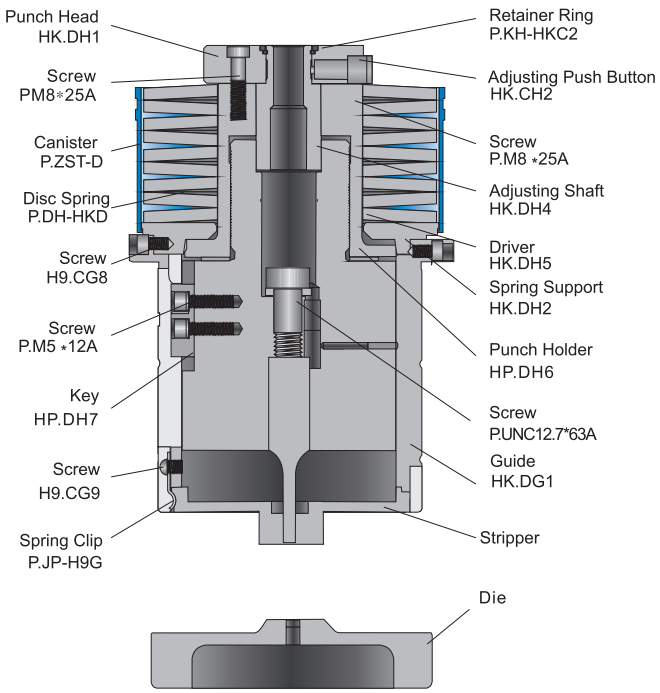

Description	Code
Punch ass'y	HR.DA1RE.
Guide ass'y	HR.DC1.
Punch	
Blade	HR.DP1RE.
Pin	HR.DP9
Stripper	HR.DS1RE.
Die (double)	HR.DD1RE.
Die (single)	HR.DD2RE.
Guide only	HR.DG1

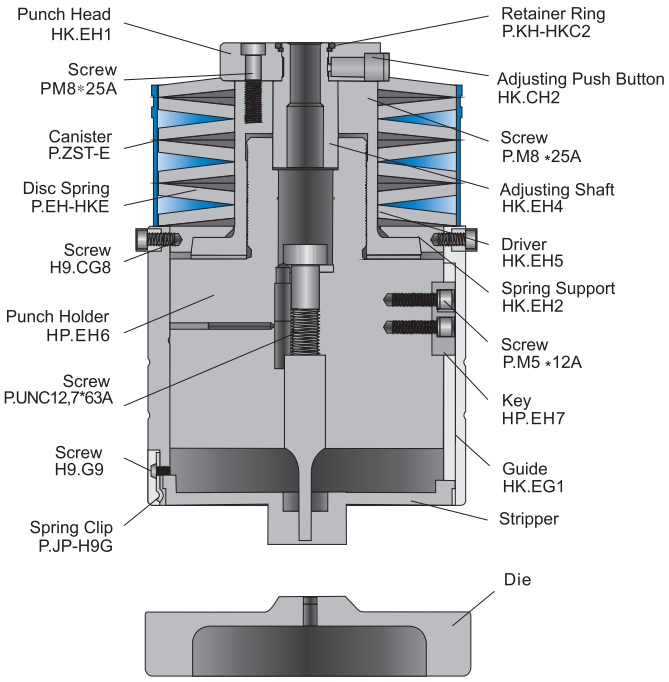

Description	Code
Punch ass'y	HR.EA1RE.
Guide ass'y	HR.EC1.
Punch	
Blade	HR.EP1RE.
Pin	HR.EP9
Stripper	HR.ES1RE.
Die (double)	HR.ED1RE.
Die (single)	HR.ED2RE.
Guide only	HR.EG1

Heavy Duty (SPH80)
A STATION
(~12.7mm) [1/2"]

Description	Code
Punch ass'y	
Round (0°)	HH.AA1RO.
Square (0°,135°)	HH.AA3SQ.
STD shape (0°,90°)	HH.AA2**.
Other (0°,90°)	HH.AA2**.
Punch	
Round (no pin)	HH.AP1RO.
STD shape (pin)	HH.AP2**.
Other (pin)	HH.AP2**.
Stripper	
Round	H9.AS1RO.
STD shape	H9.AS1**.
Other	H9.AS1**.
Die	
Round (no pin)	HZ.AD1RO.
STD shape (pin)	HZ.AD2**.
Other (pin)	HZ.AD2**.
Guide	
Round (0°)	H9.AG1
Shape (0°, 90°)	H9.AG2
Square (0°, 135°)	H9.AG3

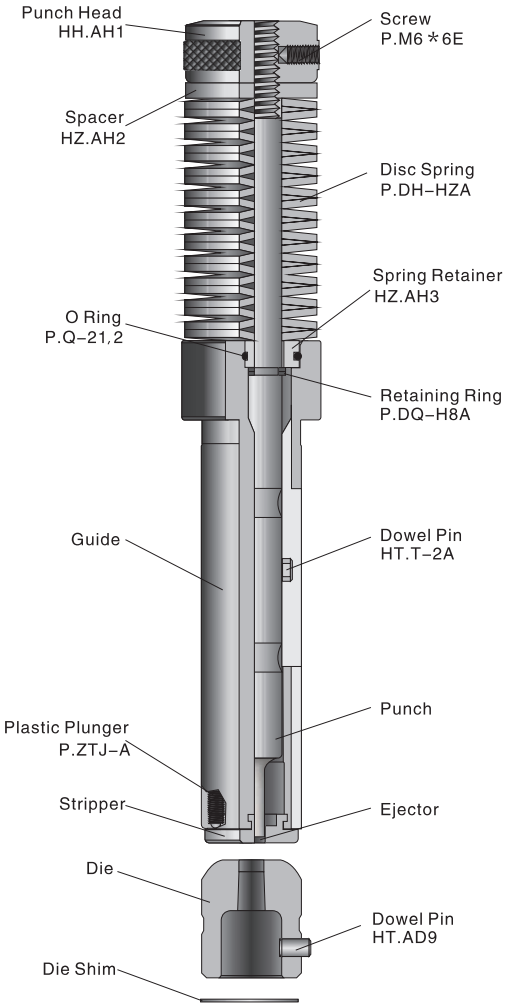

Heavy Duty (SPH80)

B STATION

(12.71–31.7mm) [1–1/4"]

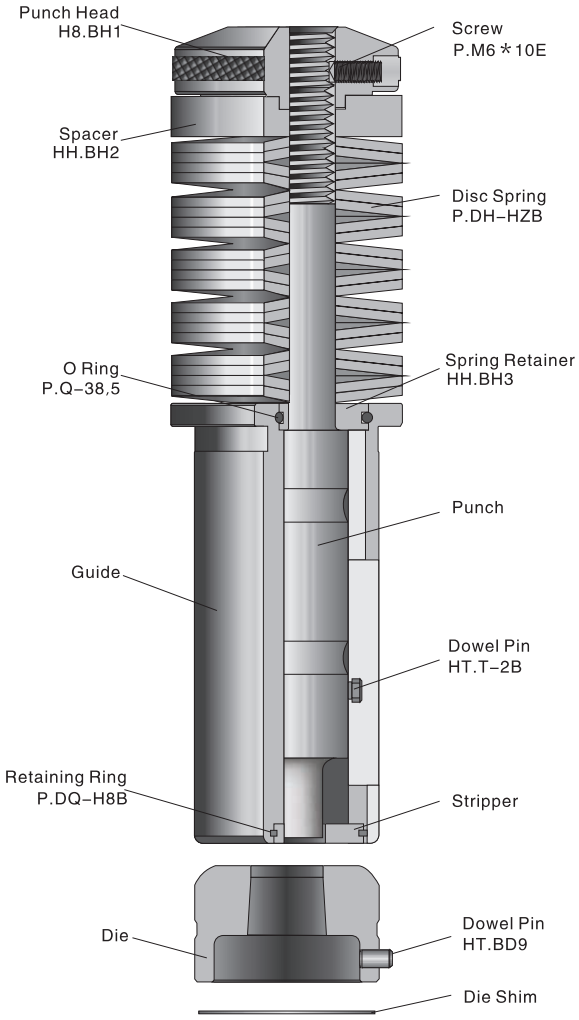

Description	Code
Punch ass'y	
Round (0°)	HH.BA1RO.
Square (0°,135°)	HH.BA3SQ.
STD shape (0°,90°)	HH.BA2**.
Other (0°,90°)	HH.BA2**.
Punch	
Round (no pin)	HH.BP1RO.
STD shape (pin)	HH.BP2**.
Other (pin)	HH.BP2**.
Stripper	
Round	H8.BS1RO.
STD shape	H8.BS1**.
Other	H8.BS1**.
Die	
Round (no pin)	HZ.BD1RO.
STD shape (pin)	HZ.BD2**.
Other (pin)	HZ.BD2**.
Guide	
Round (0°)	H8.BG1
Shape (0°, 90°)	H8.BG2
Square (0°, 135°)	H8.BG3

MULTI–TOOL

	MTHUA	MTHUB	MTHGB	XMT12.7mm	XMT24mm
Punch					
Round Shape Square	HU.AP1RO. HU.AP1**. HU.AP1.	HU.BP1RO. HU.BP1**. HU.BP1.	HG.BP1RO. HG.BP2**. HG.BP2.	HE.10P1. HE. 10P2**. HE. 10P2**.	HE.6P1. HE.6P2**.

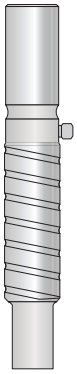
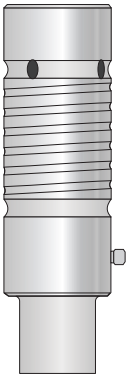
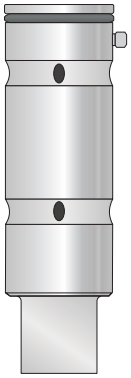
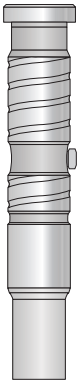
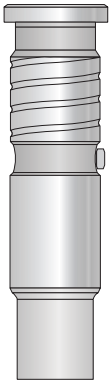

Stripper					
Round Shape Square	HU.AS1RO. HU.AS1**. HU.AS1.	HU.BS1RO. HU.BS1**. HU.BS1.	H9.BS1RO. H9.BS2**. H9.BS3.	HE.10S1. HE.10S1**. HE.10S1.	HE.6S1. HE.6S1**. HE.6S1.

Die					
Round Shape Square	HT.AD1RO. HT.AD2**. HT.AD2.	HT.BD1RO. HT.BD2**. HT.BD2.	HW.3D1RO. HW.3D2**. HW.3D2.	HE.10D1. HE.10D2**. HE.10D2.	HF.8D1. HF.8D2**. HF.8D3.

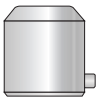

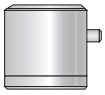
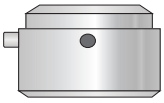

	MTHUA	MTHUB	MTHGB	XMT12.7mm	XMT24mm
Max. Size of Punch	12.7mm	31.7mm	31.7mm	12.7.0mm	24.0mm
Max. Size of Die	12.7mm+1.5mm	12.7mm+1.5mm	12.7mm+1.5mm	12.7mm+1.5mm	24.0mm+1.5mm
Height of Punch	108mm	100.5mm	100.5mm	100.0mm	100.0mm
Height of Die	30.0mm	30.0mm	15.0mm	17.5mm	24.0mm
Suitable for	Ultra MT8 Ultra IMT8	Ultra MT3 Ultra IMT3 MTE4-31.75mm	MT3Ri	XMTE10	XMTE6,XMTE10

DMT24mm	MT24-8mm	MT10-16mm	MT8-24mm	MT8i1-16mm	MT8i2-16mm
Q.H.0013.RO Q.H.0013.**.	HF.24P1. HF. 24P1**.	HF.10P1. HF. 10P1**.	HF.8P1. HF. 8P1**.	HW.8P1.RO HW.8P2** HW.8P3SQ	HW.8P1.RO HW.8P2**. HW.8P3SQ
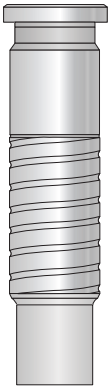					
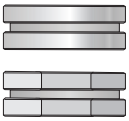					
Q.H.0014.RO. Q.H.0015.**. Q.H.0015.SQ.	HF.24S1. HF.24S2**. HF.24S2.	HF.10S1. HF.10S2**. HF.10S3.	HF.8S1. HF.8S2**. HF.8S3.	HW.8S1. HW.8S1**. HW.8S1.	HW.8S1. HW.8S1**. HW.8S1.
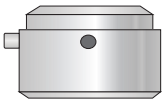		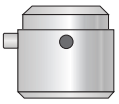	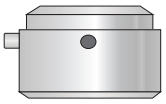	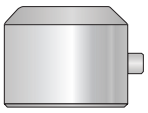	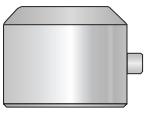
HF.8D1. HF.8D2**. HF.8D3.	HF.24D1. HF.24D2**. HF.24D2.	HF.10D1. HF.10D2**. HF.10D3.	HF.8D1. HF.8D2**. HF.8D3.	HW.8D1. HW.8D2**. HW.8D2.	HW.8D1. HW.8D2**. HW.8D2.

DMT24mm	MT24-8mm	MT10-16mm	MT8-24mm	MT8i1-16mm	MT8i2-16mm
24.0mm	8.0mm	16.0mm	24.0mm	16.0mm	16.0mm
24.0mm+1.5mm	8.0mm+1.5mm	16.0mm+1.5mm	24.0mm+1.5mm	16.0mm+1.5mm	16.0mm+1.5mm
113.5mm	70.5mm	70.5mm	70.5mm	100.0mm	100.6mm
24.0mm	17.0mm	24.0mm	24.0mm	17.6mm	17.6mm
only for DURMA	MT20,MT24, MT12,MT20,	MT6,MT10	MT6,MT8 MTE6,MTE10	MT8Ri	MT8Ri

E–Break Tool
E–Bend Tool

E-Break tool

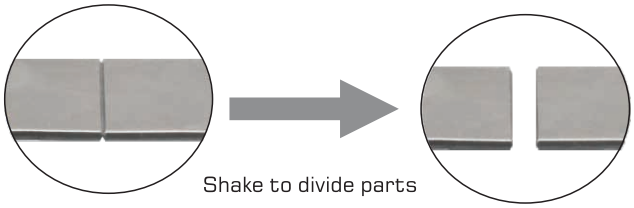

E-Bend tool

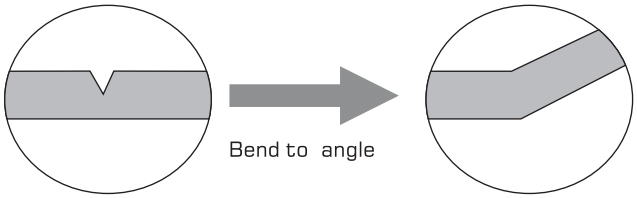

The code of E–Break tool

	Punch ass'y	Die ass'y
B STN	H.TBX.DZ**	H.TBS.DZ**
C STN	H.TCX.DZ**	H.TCS.DZ**

The code of E–Bend Tool

	Set ass'y	Set ass'y
B STN	H.TBS.DZ**	H.TBX.DZ**
C STN	H.TCS.DZ**	H.TCX.DZ**

- Be available at B, C, D station.
- Punch ass'y designed for specified thickness and material. Not adjust.
- V–line tip on punch and die insert create weak slot in sheet metal.
  Shake up and down to break parts. In E–bend, only one V–line tip.
- Restriction for thickness: Minimum 0.8mm[0.03"], Maximum 1.5mm[0.06"]
- E–Break tool, clear, smooth in cutting edge after breaking.
- E–Bend tool, the angle is not recommended to be over 90 degree.

SLITTING TOOL

	Description	C STN	D STN	E STN	WIDTH
Wilson	Blade	HI.CW1RE	HI.DW1RE	HI.EW1RE	19.05mm [0.77"]
	Holder	HI.CW9			19.05mm
Amada	Blade		HI.DT1RE	HI.ET1RE	16mm [0.63"]
	Holder		HI.DT9	HI.ET9	16mm
	ABS Holder		HI.DT8	HI.ET8	16mm
Mate	Blade		HI.DM1RE	HI.EM1RE	18mm [0.71"]
	Holder		HI.DM9		18mm

CLUSTER

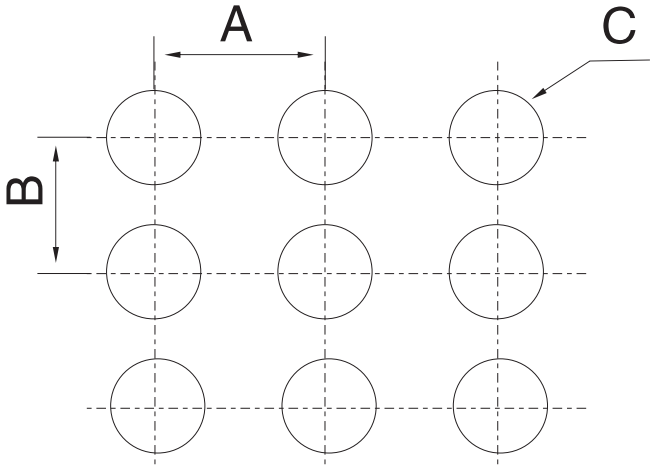

Machine_____ A _____
Material_____ B _____
C _____ T _____

- Space of holes must be over 3.2mm [0.13"] or 2T
- Please fill in the above form

FORMING TOOLS

KETEC have extensive experience in the design and manufacture of the forming tools, we also have TRUMPF machine, thick turret CNC machine etc., for testing the tooling. We surely can provide the ideal tooling products to you.

Please consulate KETEC engineers for questions when customizing the forming tools to your design.

Q–ADJUST FORMING TOOL A/B STATION

The first time for testing a forming tool, which requires continuously adjusting the length for the tool, until the workpiece meets the requirements. In this process, the old structure spring pack, needs to be removed from the CNC punch machine, loosened the screw to adjust, measured the length, locked the screw and put back to the CNC punch machine for testing again and again. This operation is generally carried out many times, lots of works and low efficiency.

By improving the structure of the main parts, Q–Adjust forming tool can achieve a fast and accurate adjustment on the length of the tools. simplify the assembly and disassembly, reduce the labor intensity and reliance on the tools, improve the productivity.

Adjust the length of A STN:

- Push the side button on the punch head and turn clockwise, decreases the length of the tool;
- Push the side button on the punch head and turn anti–clockwise, increases the length of the tool;
- Loose the side button, the punch head is locked;
- The circle of the punch head is divided into several sections for turning, the variation for each click is 0.05mm [0.002"], can achieve a precise adjustment.

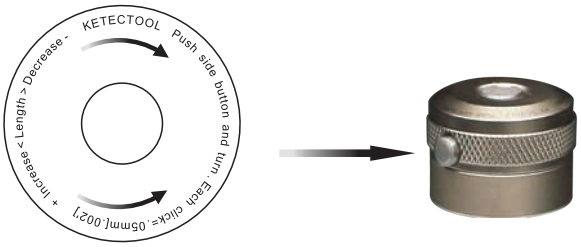

Adjust the length of B STN:

- Push the side button on the punch head and turn clockwise, decreases the length of the tool;
- Push the side button on the punch head and turn anti–clockwise, increases the length of the tool;
- Loose the side button, the punch head is locked;
- The circle of the punch head is divided into several sections for turning, the variation for each click is 0.075mm [0.003"], can achieve a precise adjustment.

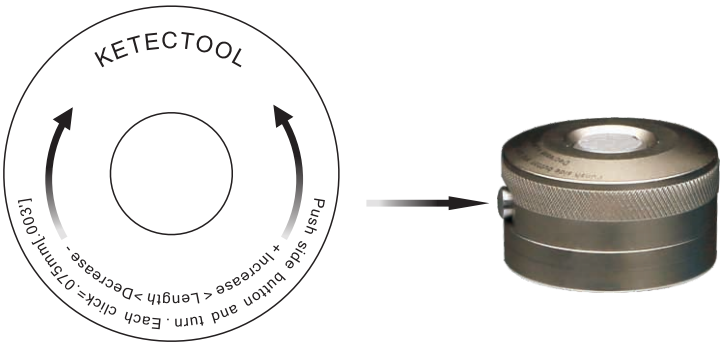

Q–ADJUST FORMING TOOL C/D STATION

Adjust the length of C/D STN:

- Loosen the screw nut in figure I, turn the punch head in clockwise way, decreases the length of the tool;
- Turn the punch head in anti–clockwise way, increases the length of the tool, when the length is meets the measurement, lock the screw nut.
- Punch head is divided into coarse thread and fine thread, depending on the specific requirements of the forming tool;
- The circle of the punch head is divided into several sections for turning
  - the variation: for fine thread, each click is 0.06mm [0.0024"] (figure II)
  - the variation: for coarse thread, each click is 0.13mm [0.0051"] (figure III)
- All tools from KETEC are clearly identified the direction and amount of the adjustment (as the figures below).
- Make sure all the tools can be precise and quick adjusted.

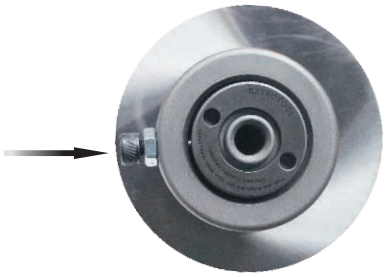

figure I

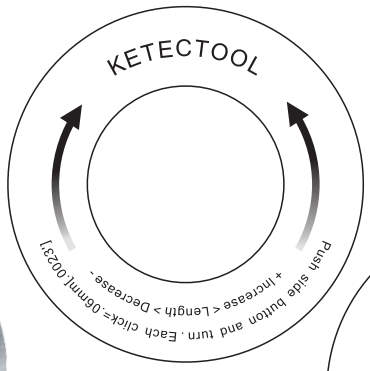

figure II

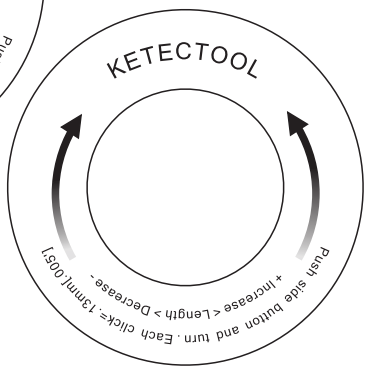

figure III

WHEEL RIB

- High speed, equal to table travel speed
- Make any shape in auto index station
- No nibble marks
- Replaceable wheels
- Works under related program
- Thickness:
  Stainless steel 0.8–1.5mm [0.03"~0.06"]
  Mild steel 0.8–2mm [0.03"~0.08"]
  Aluminum 0.8–2.5mm [0.03"~0.10"]
- Height: 2~3T, Width: 4~6T(2*H), Max Width: 12.7mm [0.50"]

WHEEL OFFSET

- High speed, equal to table travel speed
- Make any shape in auto index station
- No nibble marks
- Replaceable wheels
- Works under related program
- Thickness:
  Stainless steel 0.8–1.5mm [0.03"~0.06"]
  Mild steel 0.8–2mm [0.03"~0.08"]
  Aluminum 0.8–2.5mm [0.03"~0.10"]

CHARACTER STAMPING

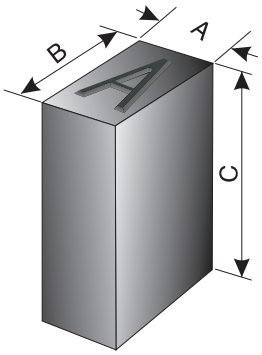

Character font & range:

A B C D E F G H I J K L M

N O P Q R S T U V W X Y Z

0 1 2 3 4 5 6 7 8 9

& / . – ( )

Character type & size:

TYPE	SIZE A	SIZE B	SIZE C
2.4	2.36mm [0.09"]	6.35mm [0.25"]	19.05mm [0.75"]
3.2	3.175mm [0.13"]	6.35mm [0.25"]	19.05mm [0.75"]
4.8	4.76mm [0.19"]	7.94mm [0.31"]	19.05mm [0.75"]
6.4	6.35mm [0.25"]	9.52mm [0.37"]	19.05mm [0.75"]

Note: 2.4 type is too small, not recomanded.

Character height chart (1:1)

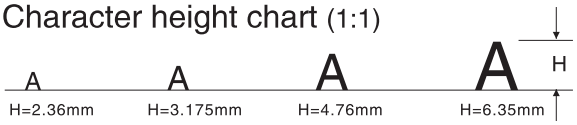

Character depth & force KN (AL, MS, SS)

TYPE	DEPTH	AL	MS	SS
2.4	0.1mm	1.1KN	2.8KN	8.9KN
3.2	0.1mm	1.6KN	4.4KN	13.3KN
4.8	0.2mm	3.6KN	10.7KN	30.2KN
6.4	0.3mm	6.2KN	16.9KN	48.9KN

Note: 2.4 type is too small, not recomanded.

EMBOSS–EXPANDED METAL

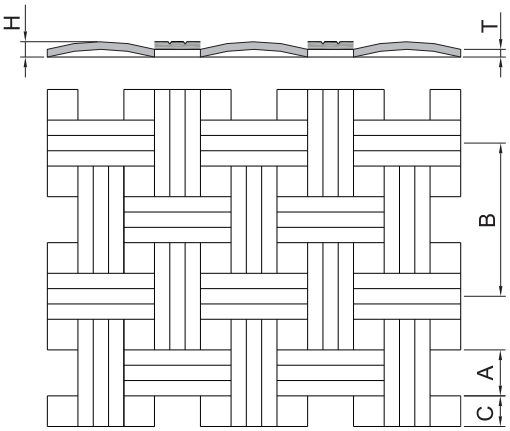

Machine_____ A _____ H _____
Material _____ B _____ T _____
C _____

- Forbid punching without sheet
- Need prepunch
- Max. thickness: mild steel 1.5mm [0.06"]
- Fill in the above form

EMBOSS-DRIPS

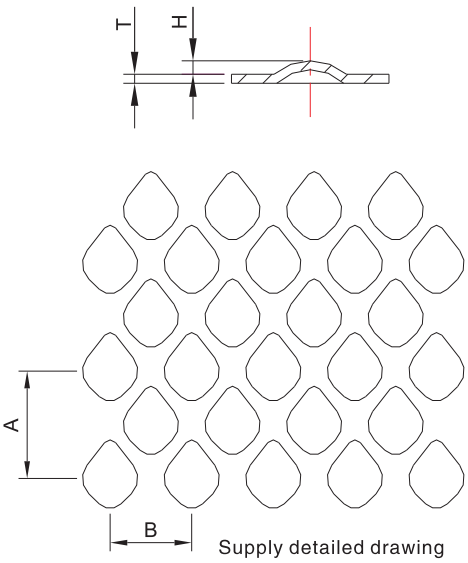

Supply detailed drawing

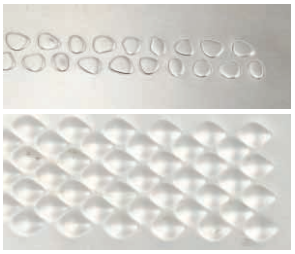

Machine_____ A _____ H _____
Material _____ B _____ T _____

- Forbid punching without sheet
- Max. thickness: 1.5mm [0.06"]
- Fill in the above form

CENTERPOINT

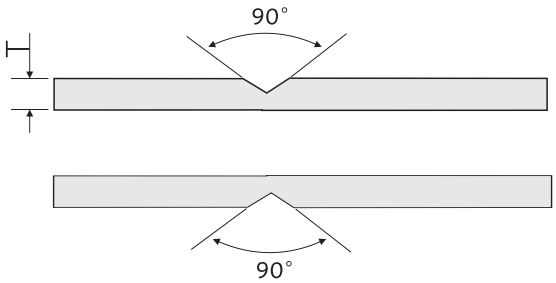

Form Down

Form Up

- Forbid punching without sheet
- Adjust punch ass'y height to control the depth of centerpoint
- Form Up, Form Down
- Angle: 90°, Max. thickness: 6.0mm [0.24"]

Machine____
Material____ T____

HALF SHEAR

Form Up

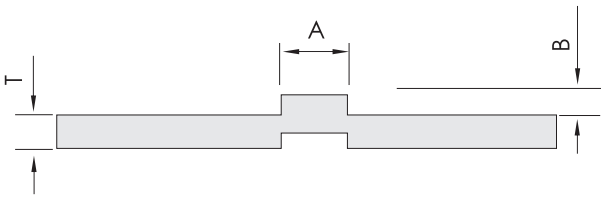

Machine____ A ____
Material____ B ____ T ____

- Give tool enough time to strip
- Form Up, Form Down
- Max. B size: 0.6T

EXTRUSION TAPPING

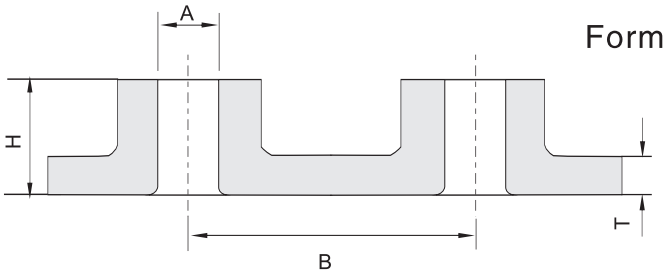

Form Up

Machine_____ A _____
Material_____ B _____
H _____ T _____

- Need prepunch
- Give tool enough time to strip
- Replaceable insert design on extrusion
- Form Up, Form Down
- Max. thickness: Mild steel 2.3mm [0.09"], AL 2.0mm [0.08"],1.2mm [0.05"]
- Forming height (Max. H): over 3*thread pitch

Prepunch size (Stainless steel) Unit: mm [inch]

Extrusion		Thickness: T			
Size	ØA	0.6 [0.02"]	0.8 [0.03"]	1.0 [0.04"]	1.2 [0.05"]
M2.6	2.21 [0.09"]	1.3 [0.05"]	1.3	1.3	
M3	2.60 [0.10"]	1.3	1.3	1.6 [0.06"]	1.8 [0.07"]
M4	3.40 [0.13"]		2.0 [0.08"]	2.0	2.0
M5	4.30 [0.17"]			2.3 [0.09"]	2.3
M6	5.10 [0.20"]			3.0 [0.12"]	3.0

Prepunch Size (MS, AL) Unit: mm [inch]

Extrusion		Thickness: T					
Size	ØA	0.8 [0.03"]	1.0 [0.04"]	1.2 [0.05"]	1.6 [0.06"]	2.0 [0.08"]	2.3 (no AL) [0.09"]
M2.6	2.21 [0.09"]	1.3 [0.05"]	1.3	1.3	1.6 [0.06"]		
M3	2.60 [0.10"]	1.3	1.3	1.6	1.6		
M4	3.40 [0.13"]	2.0 [0.08"]	2.0	2.0	2.3	2.3	2.5 [0.10"]
M5	4.30 [0.17"]		2.3 [0.09"]	2.3	2.8 [0.11"]	2.8	3.0
M6	5.10 [0.20"]			3.0 [0.12"]	3.0	3.8 [0.15"]	3.8

EXTRUSION

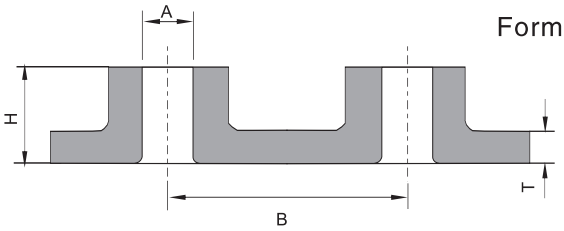

Form Up

Machine_____
Material _____

A _____
B _____
H _____
_____

T _____

- Need prepunch
- Give tool enough time to strip
- Form Up, Form Down
- Max. height: H⩾2T

EMBOSS & EXTRUSION

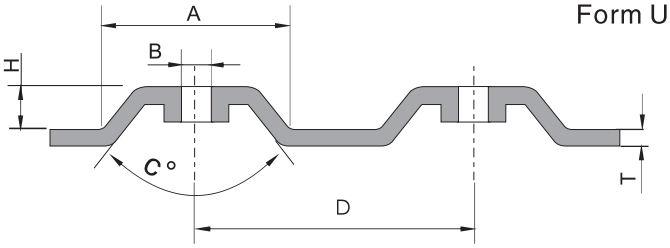

Form Up

Machine_____
Material _____

A _____
B _____
C _____

D _____
H _____
T _____

- Complete emboss and extrusion on one hit
- Give tool enough time to strip
- Form Up only

EMBOSS

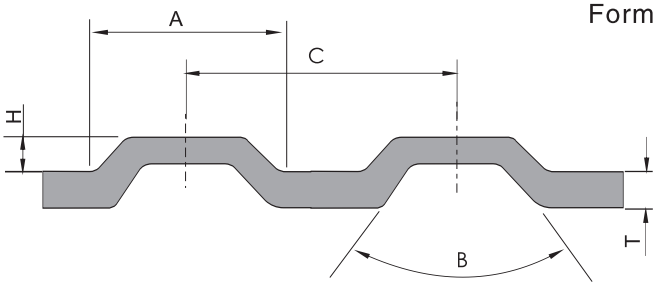

Form Up

Machine _____
Material _____

A _____
B _____
C _____

H _____
T _____

- Escape clamp or punching hole
- Can form in Round or Shape
- Give tool enough time to strip
- Form Up, Form Down

BRIDGE

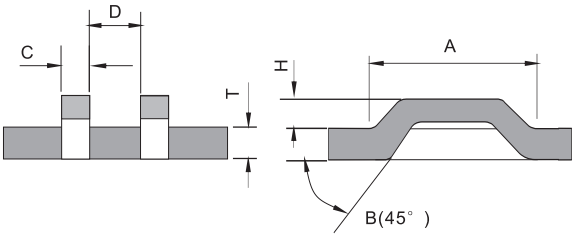

Form Up

Machine _____
Material _____

A _____
B _____
C _____

D _____
H _____
T _____

- Can be designed in single or double bridge
- Give tool enough time to strip
- Form Up, Form Down
- Width of the Bridge: C⩾2T and C⩾1.8mm [0.07"]

LANCE & FORM

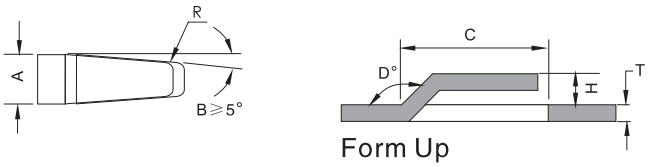

Machine_____ A: _____ D: _____
Material _____ B: _____ R: _____
C: _____ H: _____ T: _____

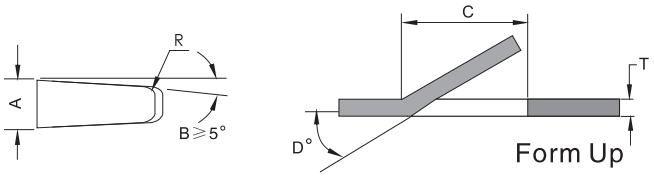

Machine ____ A ____
Material ____ B ____ D ____
C ____ R ____ T ____

- Tooling is made for specific thickness
- Give tool enough time to strip
- Form up only

LOCATOR

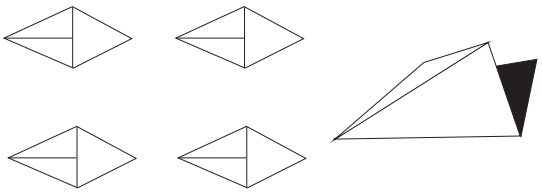

- No scrab on opposite side of sheet metal
- Use thinner thickness if shear button cannot work
- Forbid punching without sheet
- Min. spaces between centers of locators: 15mm

CLOSE LOUVER

Unit: mm [inch]

STOCKED SIZE				
SIZE A	50 [1.97]	80 [3.15]	80 [3.15]	80 [3.15]
SIZE B	10 [0.39]	10 [0.39]	12 [0.47]	15 [0.59]
SIZE H	5 [0.20]	6 [0.24]	6 [0.24]	6 [0.24]

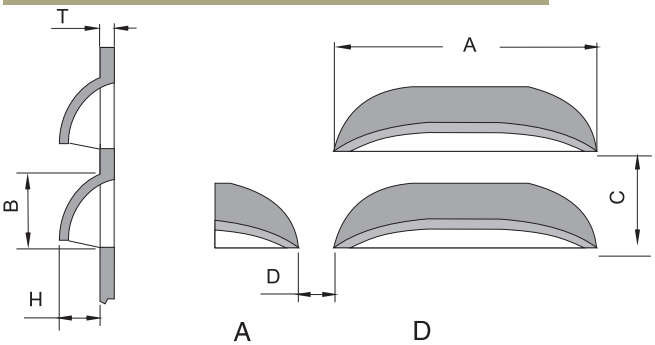

Machine_____ A _____ D _____

Material _____ B _____ H _____

C _____ T _____

- Tooling is made for specific thickness
- Consider the travel direction of the sheet metal, give tool enough time to strip
- Adjust length without shim, replaceable insert
- Form Up only

OPEN LOUVER

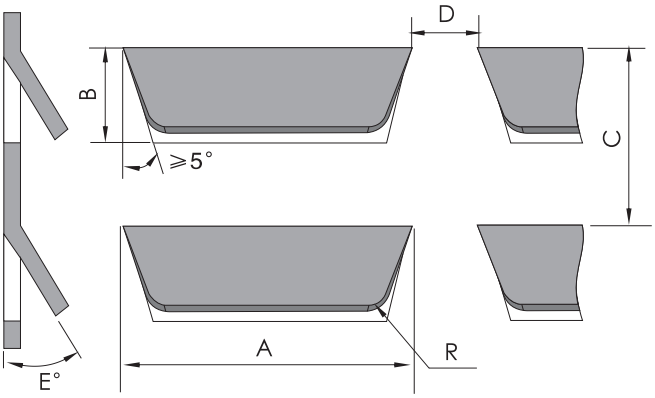

A _____ D _____

Machine_____ B _____ E _____

Material _____ C _____ T _____ R _____

- Tooling is made for specific thickness
- Consider the travel direction of the sheet metal, give tool enough time to strip
- Adjust length without shim, replaceable insert
- Form Up only

CARD GUIDE

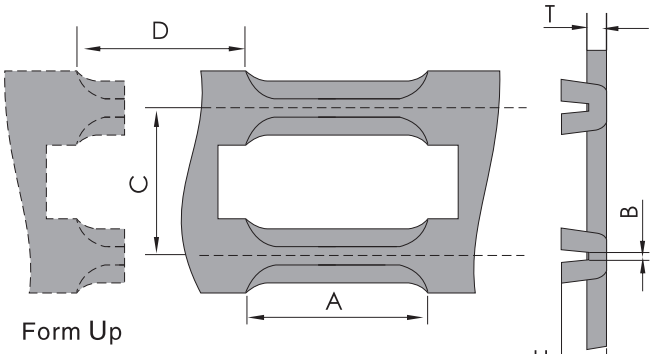

Machine_____ A _____ D _____
Material_____ B _____ H _____
C _____ T _____

- Tooling is made for specific thickness
- Give tool enough time to strip
- Adjust length without shim, replaceable insert
- Form up Height: H≤2T, otherwise will be deformation easily
- Form Up

HINGE

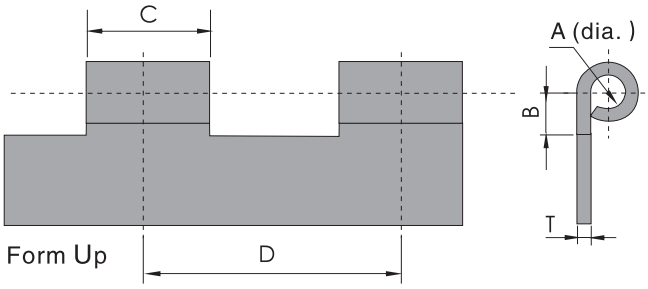

Machine_____ A _____ D _____
Material_____ B _____ T _____
C _____

- Tooling is made for specific thickness, need prepunch
- First for curling, second for forming
- Thickness: T≤1.5mm (Mild Steel); T≤1.5mm (Stainless Steel)
- Form Up only

RIB TOOL

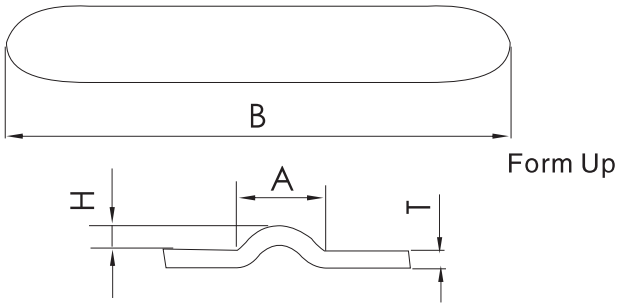

Machine ____ A ____ H ____
Material ____ B ____ T ____

- Keep proper away from holes, clamp, material edge
- Form Up, Form Down
- Increment of ribbling rib should be 0.5~2.0mm [0.02"~0.08"]
- Max. thickness2.7mm (MS & AL), 2.3mm(SS)

KNOCKOUT

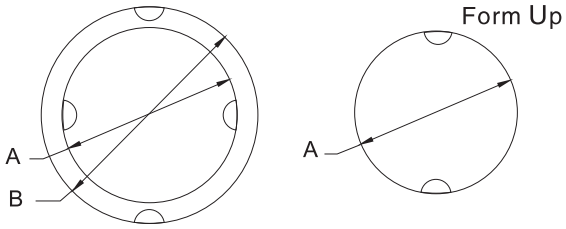

Machine ____ A ____
Material ____ B ____ T ____

- Forbid punching without sheet
- Adjust the height of the tool to change the depth when punching
- Can be designed in single / double / triple EKO
- The positioning must be accurated for the bottom dead point of the CNC punch press machine
- Form Up, Form Down

THREAD FORM

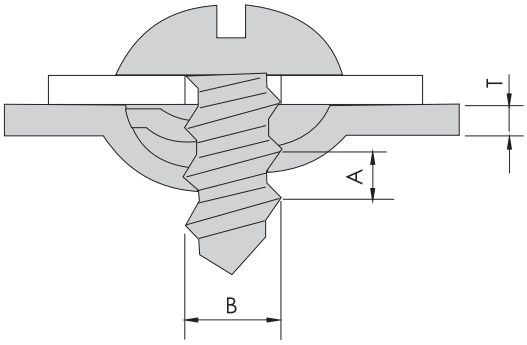

Machine _____ A _____
Material _____ B _____ T _____

- Form Up, Form Down
- Thickness range: 0.5mm~1.2mm [0.02"~0.05"]

THREAD LOOP

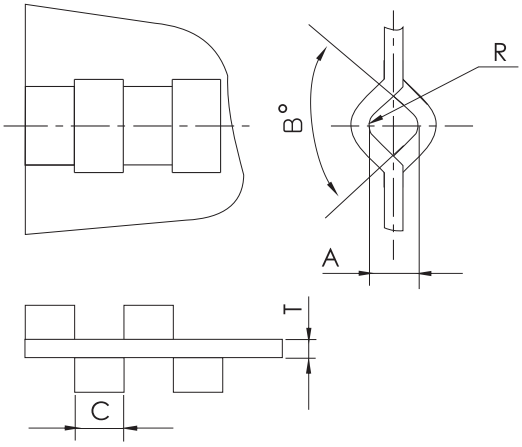

Machine _____ A _____ C _____ R _____
Material _____ B _____ T _____

- Standard angle for B is 90°
- Please fill in the left form

STAMPING

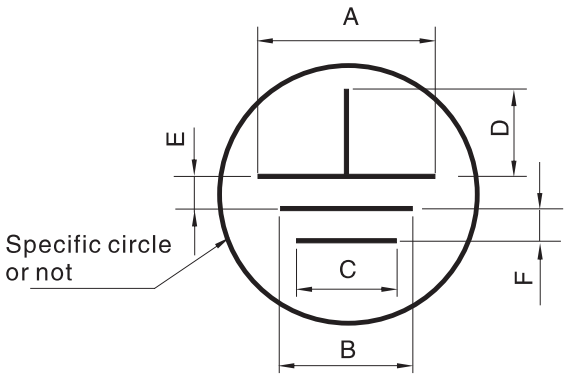

Machine_____ A _____ D _____ G(width)_____
Material_____ B _____ E _____ H(depth)_____
C _____ F _____

- Forbid punching without sheet
- Adjust the height of the tool to change the depth when punching
- Turn in any direction in auto index station
- Form Up, Form Down

MULTI–SCRIBE

- Forbid punching without sheet
- Required special control program for the machine
- Change spring for different sheet metal in auto index station
- Form Down only

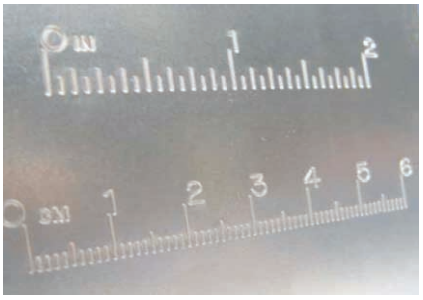

COUNTERSINK

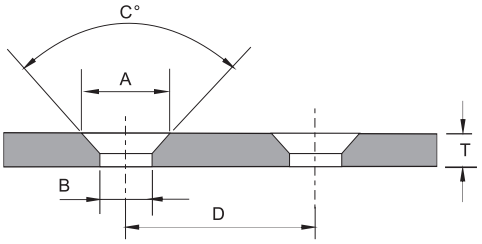

Machine _____ A _____ D _____
Material _____ B _____ T _____
C _____

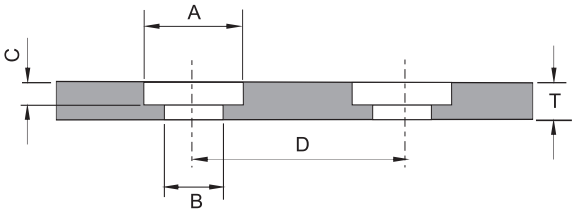

Machine _____ A _____ D _____
Material _____ B _____ T _____
C _____

- Need prepunch
- Adjust prepunch size to get different depth
- Form Up, Form Down
- Max. thickness: T⩾1.0mm [0.04"]

EMBOSS COUNTERSINK

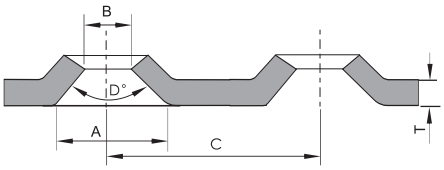

Machine _____ A _____ D _____
Material _____ B _____ T _____
C _____

- Suggest using prepunch
- Form up only

Thick Turret Tools Cabinet

Thick Turret Tools Trolley

Demagnitizer

Visual Measurement System
for Sheet Metal

Auto Tool Grinding Machine

SHEET METAL ACCESSORIES

- Visual Measurement System for Sheet Metal
- Thick Turret Tools Cabinet
- Thick Turret Tools Trolley
- Alignment Tool
- Adaptor
- Demagnitizer
- Mounting or Dismounting Holder
- Accessories
- Auto Tool Grinding Machine

VISUAL MEASUREMENT SYSTEM FOR SHEET METAL

Suitable for measuring the flat sheet metal of CNC punching machine, laser cutting machine, plasma cutting machine, general punching machine.

- Measurement accurary: central area ± 0.05mm [0.002"]
- Single max. measurement range: 1500mm × 1000mm [59.05" x 39.37"]
- Applicable range: flat sheet metal parts of different materials
- Size: 2090mm(L) × 1880mm(W) × 3700mm(H) [82.28"(L) x 74.01"(W) x 145.67"(H)]
- Weight: approx. 800Kg
- Power supply: single–phase AC 220V
- Power: < 1.5KW

Thick Turret Tools Trolley

Code:J.MJC–HT

Standard configuration

6 Shelves (3A+3B), 12 Shelf supports
Full load 27 sets A station,
18 sets B station,
several C/D/E station

Shelf for A station J.MJC–HTMJ1

Capacity: Each shelf 9 sets Punch ass'y

Shelf for B station J.MJC–HTMJ2

Capacity: Each shelf 6 sets Punch ass'y

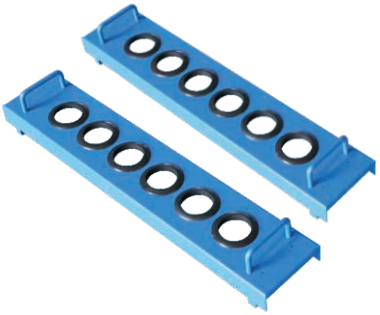

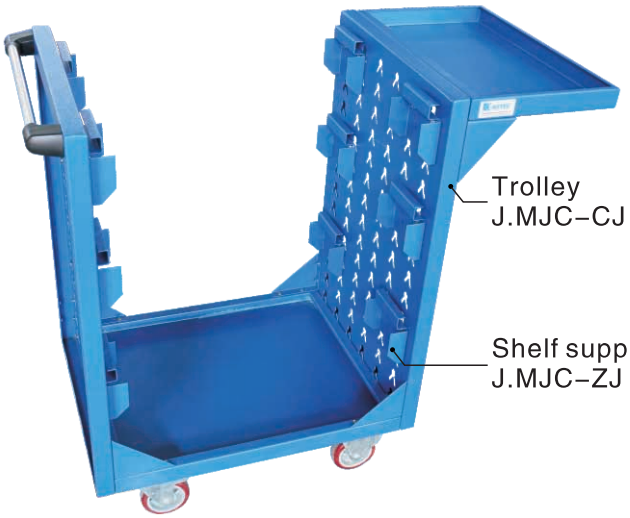

Thick Turret Tools Cabinet

Code: J.MJG–HT

Standard configuration

Accommodates 4 Layers (Standard: 2A+2B)

A STN Punch ass'y 36 sets, Punch 36 pcs, Die 110 pcs

B STN Punch ass'y 24 sets, Punch 24 pcs, Die 80 pcs

Features C/D/E STN Punch ass'y 12 sets, several Punches, Dies, Strippers

Layer for A STN J.MJG–HTCB1
Capacity:
Each layer loads 18 punch ass'y, 18 punches and 54 dies

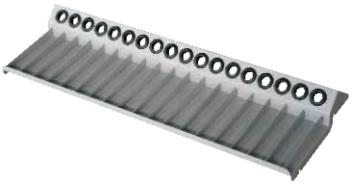

Thick Turret Tools Cabinet
J.MJG–HTGT

Layer for B STN J.MJG–HTCB2
Capacity:
Each layer loads 12 punch ass'y, 12 punches and 36 dies

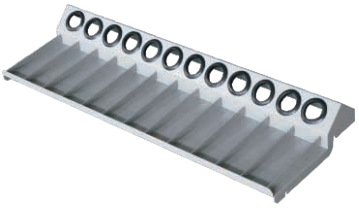

ALIGNMENT TOOL

A STN

B STN

C STN

D STN

DESCRIPTION	Code	Code	Code	Code
Set assy	J.DW–HA1	J.DW–HB1	J.DW–HC1	J.DW–HD1
Punch assy	J.DW–HA2	J.DW–HB2	J.DW–HC2	J.DW–HD2
Die	J.DW–HA3	J.DW–HB3	J.DW–HC3	J.DW–HD3
T–Handle	J.DW–HA4	J.DW–HB4	J.DW–HB4	J.DW–HB4

ADAPTER

B–A

C–A

C–B

D–B

STN	Description	Code	Price
B–A	Punch ass'y Die ass'y	J.H–BA1 J.H–BA3	
C–A	Punch ass'y Die ass'y	J.H–CA1 J.H–CA3	
D–A	Punch ass'y Die ass'y	J.H–DA1 J.H–DA3	
C–B	Punch ass'y Die ass'y	J.H–CB1 J.H–CB3	
D–B	Punch ass'y Die ass'y	J.H–DB1 J.H–DB3	
D–C	Punch ass'y Die ass'y	J.H–DC1	

DEMAGNITIZER

CODE	PRICE
J.DZ-1	

Technical data:
1. Rated voltage: 220V ± 10% 50HZ
2.Rated current: 3.3A single phase
3.Electrical energy: 1KW, Weight 6.0 KG
4.Size(mm):300x158x230 [11.81"x6.22"x9.05"]

MOUNTING & DISMOUNTING HOLDER

Description	Code	Price
Holder for set	J.ZPT	
Holder for A/B punch	J.ZPT-HAB	
Holder for A/B forming	J.ZPT-HABS	
Holder for C/D/E	J.ZPT-HCDE	

BALL RIDING DIE BRUSH DIE

Description	Ball Riding Die	
STN	CODE	PRICE
A station	J.GZ-HA1	
B station	J.GZ-HB1	
C station	J.GZ-HC1	
D station	J.GZ-HD1	

Description	Brush Die	
STN	CODE	PRICE
A station	J.MS-HA1	
B station	J.MS-HB1	
C station	J.MS-HC1	
D station	J.MS-HD1	

ACCESSORIES

Inner Plier		Outer Plier	
Code	Price	Code	Price
J.NKQ		J.WKQ	

Hex Wrench	
Code	Price
J.BS	

EJECTOR

Description	ϕ 3mm		ϕ 6mm		ϕ 10mm	
	Code	Price	Code	Price	Code	Price
Ejector	P.JL03		P.JL06		P.JL10	
Package	P.JL0315		P.JL0610		P.JL1005	

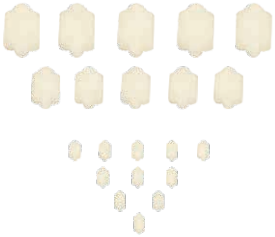

SHIM

Description		A STN	B STN	C STN	D STN
		Code	Code	Code	Code
Punch Shim	0.4mm 0.016"			P.DP-HCP04	P.DP-HDP04
Punch Shim	0.8mm 0.031"			P.DP-HCP08	P.DP-HDP08
Punch Shim	1.2mm 0.047"			P.DP-HCP12	P.DP-HDP12
Punch Shim pack (9 pcs)				P.DP-HCP	P.DP-HDP
Die Shim	0.4mm 0.016"	P.DP-HAD04	P.DP-HBD04	P.DP-HCD04	P.DP-HDD04
Die Shim	0.8mm 0.031"	P.DP-HAD08	P.DP-HBD08	P.DP-HCD08	P.DP-HDD08
Die Shim	1.2mm 0.047"	P.DP-HAD12	P.DP-HBD12	P.DP-HCD12	P.DP-HDD12
Die Shim pack (9 pcs)		P.DP-HAD	P.DP-HBD	P.DP-HCD	P.DP-HDD

Note: one pack include 3 pcs for different thickness

Auto Tool Grinding Machine
Model: AG–135

- Automatic sharpening CNC punch press tools.
- Tool grinding system programs autonomously.
- Precision grinding: ± 0.005mm.

Basic Parameters

Overall size	L x W x H	Unit: mm	900 x 800 x 1920
Weight		Unit: kg	1100
Voltage	380V AC	Unit: V	3–phase / 5–line
Max. power		Unit: KW	1.75

A STATION

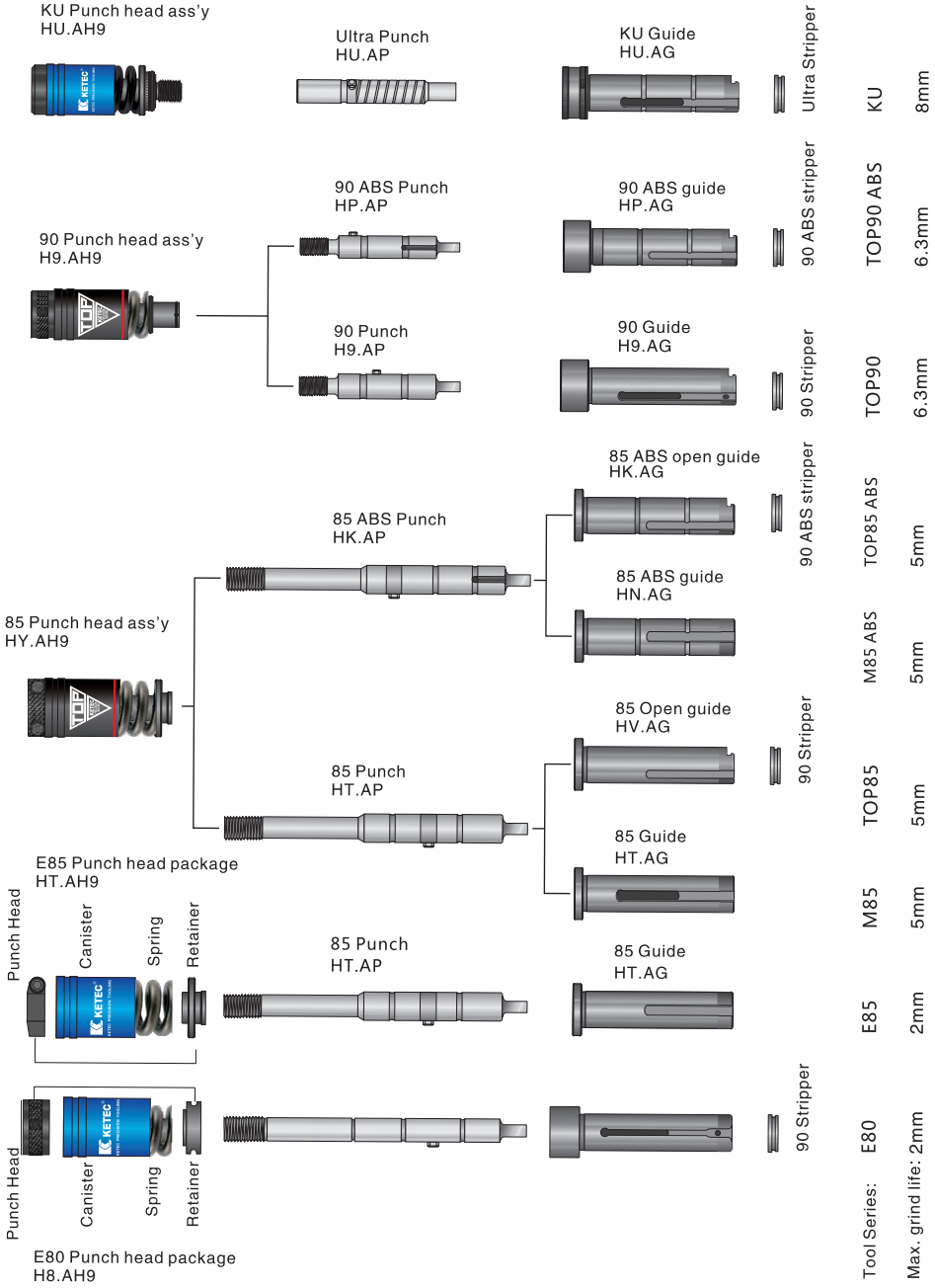
KU Punch head ass'y
HU.AH9
Ultra Punch
HU.AP
KU Guide
HU.AG
Ultra Stripper
90 Punch head ass'y
H9.AH9
90 ABS Punch
HP.AP
90 Punch
H9.AP
90 ABS guide
HP.AG
90 Guide
H9.AG
90 ABS stripper
90 Stripper
85 Punch head ass'y
HY.AH9
85 ABS Punch
HK.AP
85 Punch
HT.AP
85 ABS open guide
HK.AG
85 ABS guide
HN.AG
85 Open guide
HV.AG
85 Guide
HT.AG
90 ABS stripper
90 Stripper
E85 Punch head package
HT.AH9
Punch Head
Canister
Spring
Retainer
85 Punch
HT.AP
85 Guide
HT.AG
Punch Head
Canister
Spring
Retainer
E80 Punch head package
H8.AH9
90 Stripper
Tool Series:
E80
E85
M85
TOP85
M85 ABS
TOP85 ABS
TOP90
TOP90 ABS
KU
Max. grind life: 2mm
2mm
5mm
5mm
5mm
5mm
6.3mm
6.3mm
8mm

B STATION

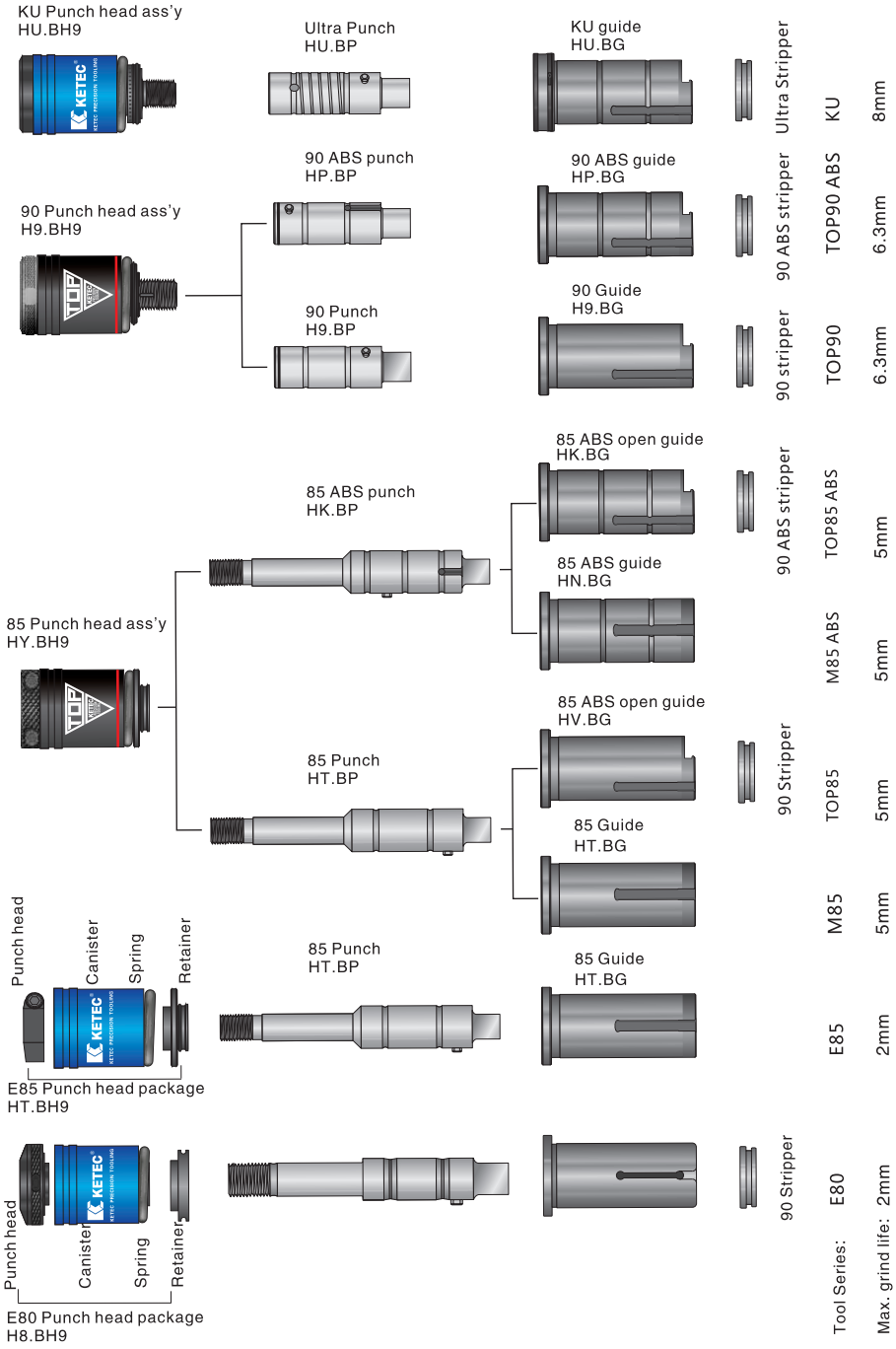
KU Punch head ass'y
HU.BH9
90 Punch head ass'y
H9.BH9
85 Punch head ass'y
HY.BH9
Punch head
Canister
Spring
Retainer
E85 Punch head package
HT.BH9
Punch head
Canister
Spring
Retainer
E80 Punch head package
H8.BH9
Ultra Punch
HU.BP
90 ABS punch
HP.BP
90 Punch
H9.BP
85 ABS punch
HK.BP
85 Punch
HT.BP
85 Punch
HT.BP
KU guide
HU.BG
90 ABS guide
HP.BG
90 Guide
H9.BG
85 ABS open guide
HK.BG
85 ABS guide
HN.BG
85 ABS open guide
HV.BG
85 Guide
HT.BG
85 Guide
HT.BG
Ultra Stripper
90 ABS stripper
90 stripper
90 ABS stripper
90 Stripper
90 Stripper
Tool Series:
Max. grind life:
E80
2mm
E85
2mm
M85
5mm
TOP85
5mm
M85 ABS
5mm
TOP85 ABS
5mm
TOP90
6.3mm
TOP90 ABS
6.3mm
KU
8mm

C STATION

E85
Guide ass'y
HT.CC1

TOP 85
Guide ass'y
HV.CC1

TOP85ABS
Guide ass'y
HK.CC1

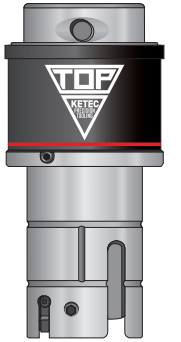

TOP90ABS
Guide ass'y
HP.CC1

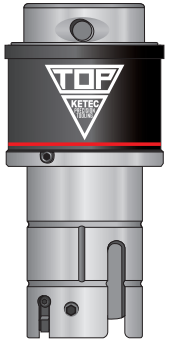

85 Punch
HT.CP

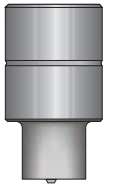

85 Punch
HT.CP

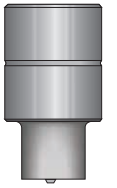

85 ABS Punch
HK.CP

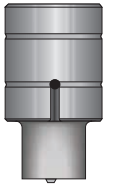

90 Punch
H9.CP

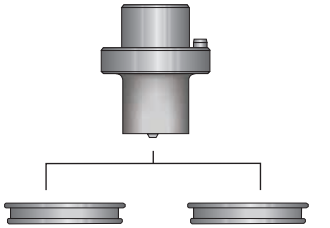

85 Stripper
HT.CS

85 Stripper
HT.CS

85 ABS stripper
HK.CS

90 Stripper
H9.CS

90 ABS stripper
HP.CS

Tool series:	E85	TOP85	TOP85 ABS	TOP90	TOP90 ABS
Max. gring life:	2mm	5~8mm	5~8mm	5~8mm	5~8mm

D STATION

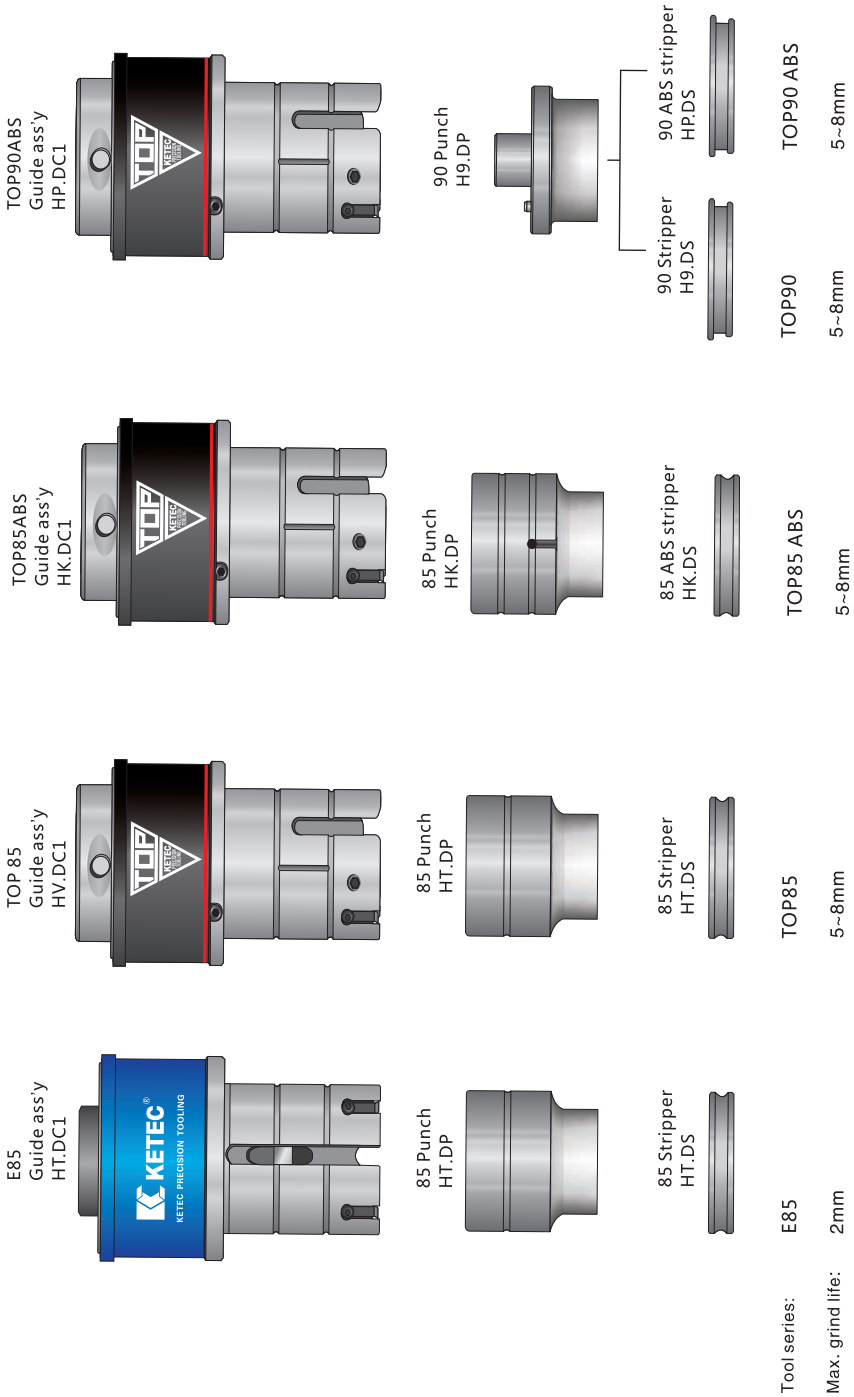

Tool series:	E85	TOP85	TOP85 ABS	TOP90	TOP90 ABS
Max. grind life:	2mm	5~8mm	5~8mm	5~8mm	5~8mm

KETEC®

SHAPE CLASSES

KETEC

STANDARD SHAPE

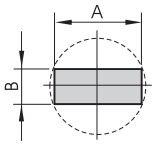

Code: RE
Name: Rectangle
Size: B/A

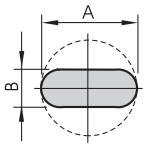

Code: OB
Name: Oblong
Size: B/A

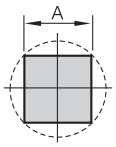

Code: SQ
Name: Square
Size: A

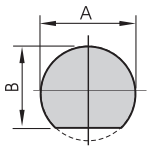

Code: SD
Name: Single D
Size: B/A

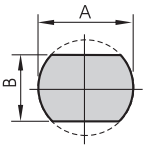

Code: DD
Name: Double D
Size: B/A

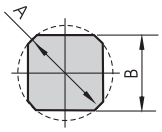

Code: QD
Name: Quad D
Size: B/A

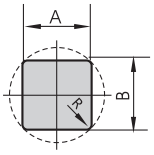

Code: QR
Name: Quad R
Size: B/A/R

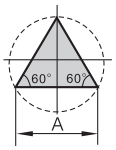

Code: ET
Name:
Equilateral Triangle
Size: A

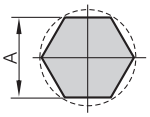

Code: HX
Name: Hexagon
Size: A

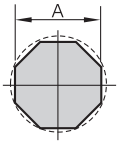

Code: OT
Name: Octagon
Size: A

GROUP A

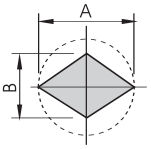

Code: A0
Name: Diamond
Size: B/A

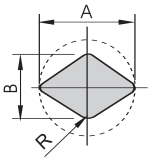

Code: A1
Name: Diamond
Size: B/A/R

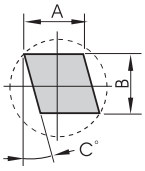

Code: A2
Name: Diamond
Size: B/A/C

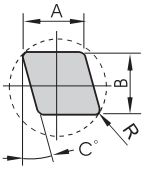

Code: A3
Name: Diamond
Size: B/A/C/R

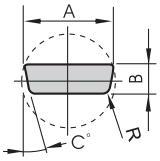

Code: A4
Name:
Cable Connector
Size: B/A/C/R

GROUP B

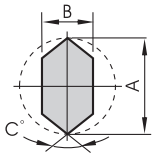

Code: A5
Name: Six Edges
Size: B/A/C

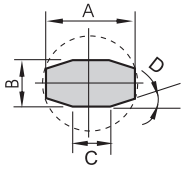

Code: A6
Name:Eight Edges
Size: C/B/A/D

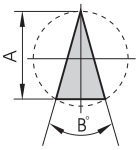

Code: A7
Name: Triangle
Size: B/A

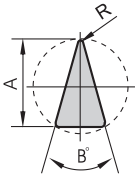

Code: A8
Name:Triangle w/R
Size: A/B/R

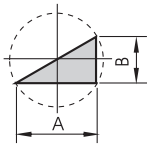

Code: A9
Name:
Right Triangle
Size: B/A

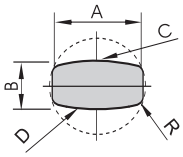

Code: B0
Name: Double R
Size: B/A/C/D/R

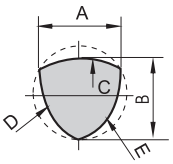

Code: B1
Name: Tri-R
Size: B/A/C/D/E

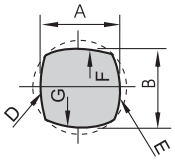

Code: B2
Name: Quad-R
Size: B/A/D/E/F/G

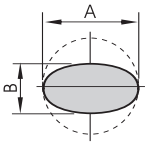

Code: B3
Name: Ellipse
Size: B/A/C/R

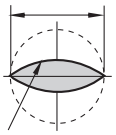

Code: B4
Name: Football
Size: A/B

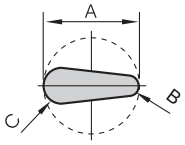

Code: B5
Name: Key Hole
Size: A/B/C

SPECIAL SHAPE

Special shape follows the attached drawing

CODE: FT

SAME STATION TOOLING, SAME GROUP SHAPE, SAME PRICE!

GROUP C

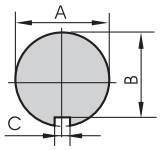

Code: C0
Name: Key Way
Size: C/B/A

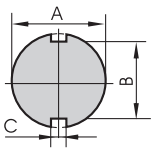

Code: C1
Name:
Double Key Way
Size: C/B/A

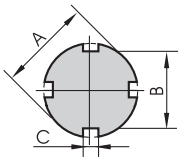

Code: C2
Name:
Quad Key Way
Size: C/B/A

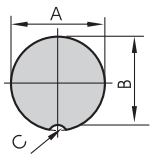

Code: C3
Name: Key Way
Size: C/B/A

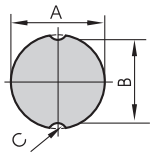

Code: C4
Name: Key Way
Size: C/B/A

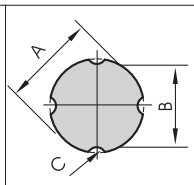

Code: C5
Name: Key Way
Size: C/B/A

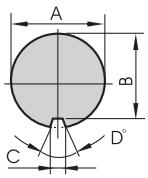

Code: C6
Name: Key Way
Size: C/B/A/D

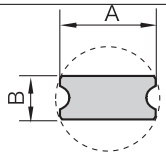

Code: C7
Name: Micro-joint
Size: B/A

GROUP D

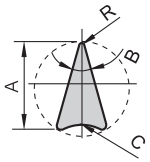

Code: D0
Name:Triangle w/R
Size: A/B/C/R

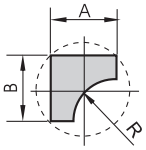

Code: D1
Name:
One way radius
Size: B/A/R

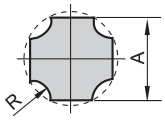

Code: D2
Name:
Four way radius
Size: A/R

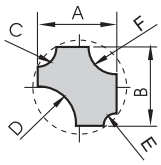

Code: D3
Name:
Four way radius
Size: A/B/C/D/E/F

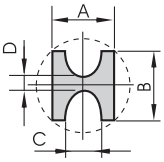

Code: D4
Name: H w/radius
Size: D/C/B/A

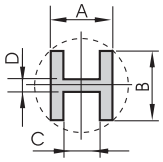

Code: D5
Name: H shape
Size: D/C/B/A

GROUP E F

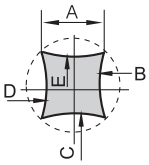

Code: E0
Name: Four radius
Size: A/B/C/D/E

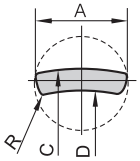

Code: E1
Name: Banana
Size: A/C/D/R

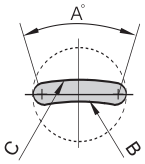

Code: E2
Name: Banana
Size: B/C/A

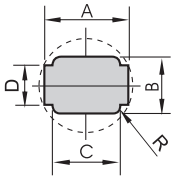

Code: E3
Name: Connector
Size: D/B/C/A/R

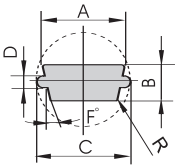

Code: E4
Name: Connector
Size: D/B/A/C/F/R

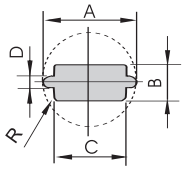

Code: E5
Name: Connector
Size: D/B/C/A/R

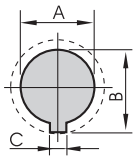

Code: E6
Name: Key Hole
Size: C/A/B

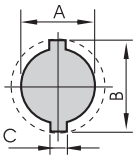

Code: E7
Name: Key Hole
Size: C/A/B

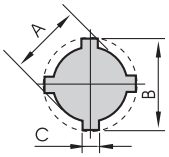

Code: E8
Name: Key Hole
Size: C/A/B

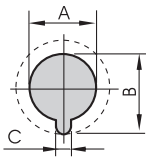

Code: F0
Name: Key Hole
Size: C/A/B

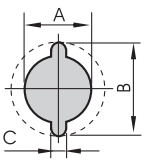

Code: F1
Name: Key Hole
Size: C/A/B

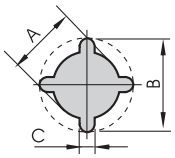

Code: F2
Name: Key Hole
Size: C/A/B

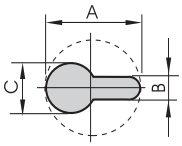

Code: F3
Name: Key Hole
Size: B/C/A

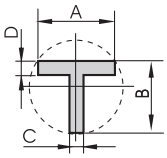

Code: F4
Name: T shape
Size: D/C/B/A

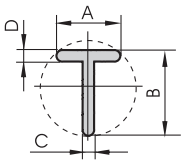

Code: F5
Name: T shape
Size: D/C/A/B

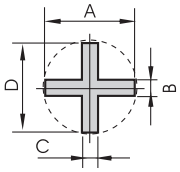

Code: F6
Name: Cross
Size: C/B/D/A

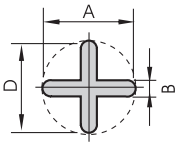

Code: F7
Name: Cross
Size: B/A/D

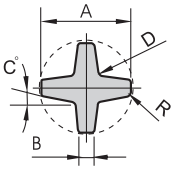

Code: F8
Name: Cross
Size: B/A/C/D/R

Punch Die Stripper

RECIPIENT:	SENDER:
COMPANY:	END USER:
DEPT.:	TELEPHONE:
TELEPHONE:	FAX No.:
FAX No.:	PAGES:
SUBJECT:	DATE:

Thick Turret		☐ E80 ☐ E85 ☐ M85 ☐ TOP90 ☐ TOP85 ☐ TOP85 ABS ☐ TOP90 ABS ☐ SPH80 ☐ SPH90 ☐ MT						
No.	Station	Description	Size	Shape	Amount	Sheetmetal	Thickness	Remark

KETEC®

WeChat of KETEC PRECISION TOOLING

More about KETEC PRECISION TOOLING, please enter

Http://www.ketectool.com

KETEC has certified by the ISO 9001:2008 quality management system

ProgTools
Sweden AB

http://progtools.se

KETEC®

Ketec Precision Tooling Co.,Ltd.
Add: No.7,Lifeng Road., Mingzhu Industrial Park,Conghua, Guangzhou, China
P.O.Box: 510931
Tel: 0086 20 37965500 Fax: 0086 20 37965133
E-mail:international@ketectool.com
Http://www.ketectool.com